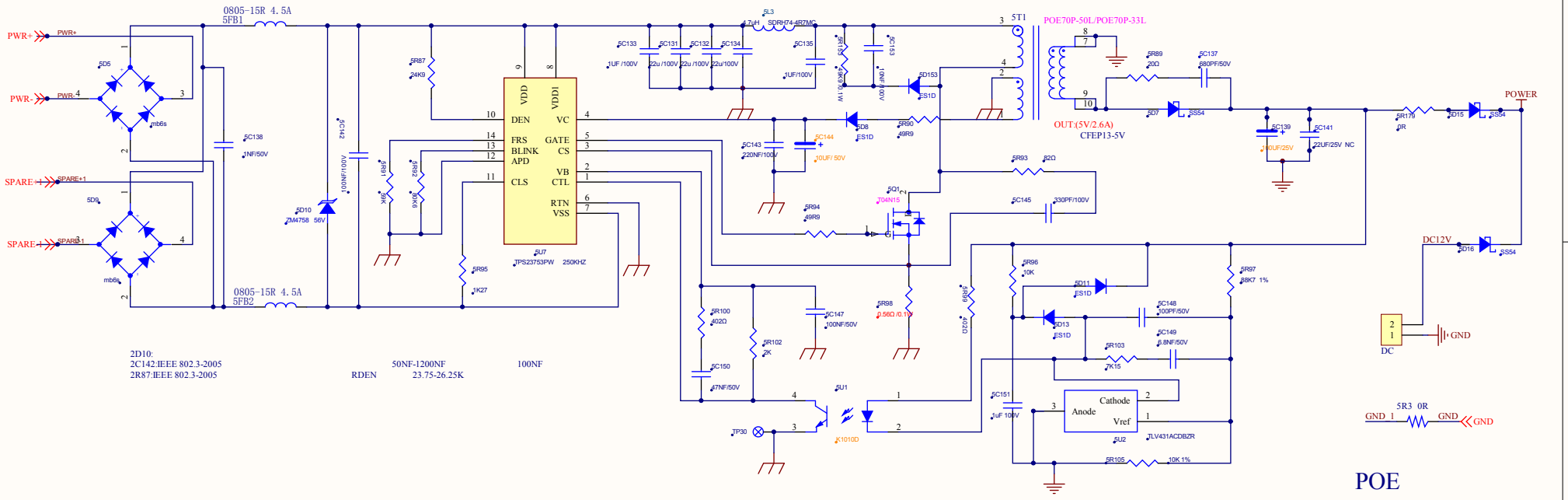

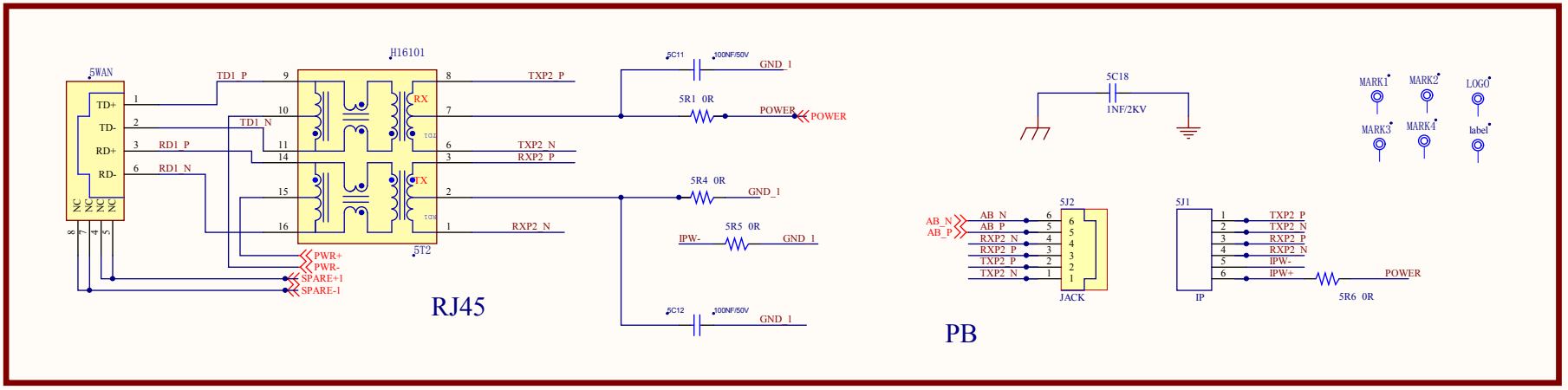

Title	ModaMedia-IP-G3	
Size A3	Number ModaMedia-IP-G3	Revision V1.0
Date: 2020/5/12	Sheet lof 2	
File: F:\WORK\..\ModaMedia-IP PB(POE	Drawn By: ZOTO	