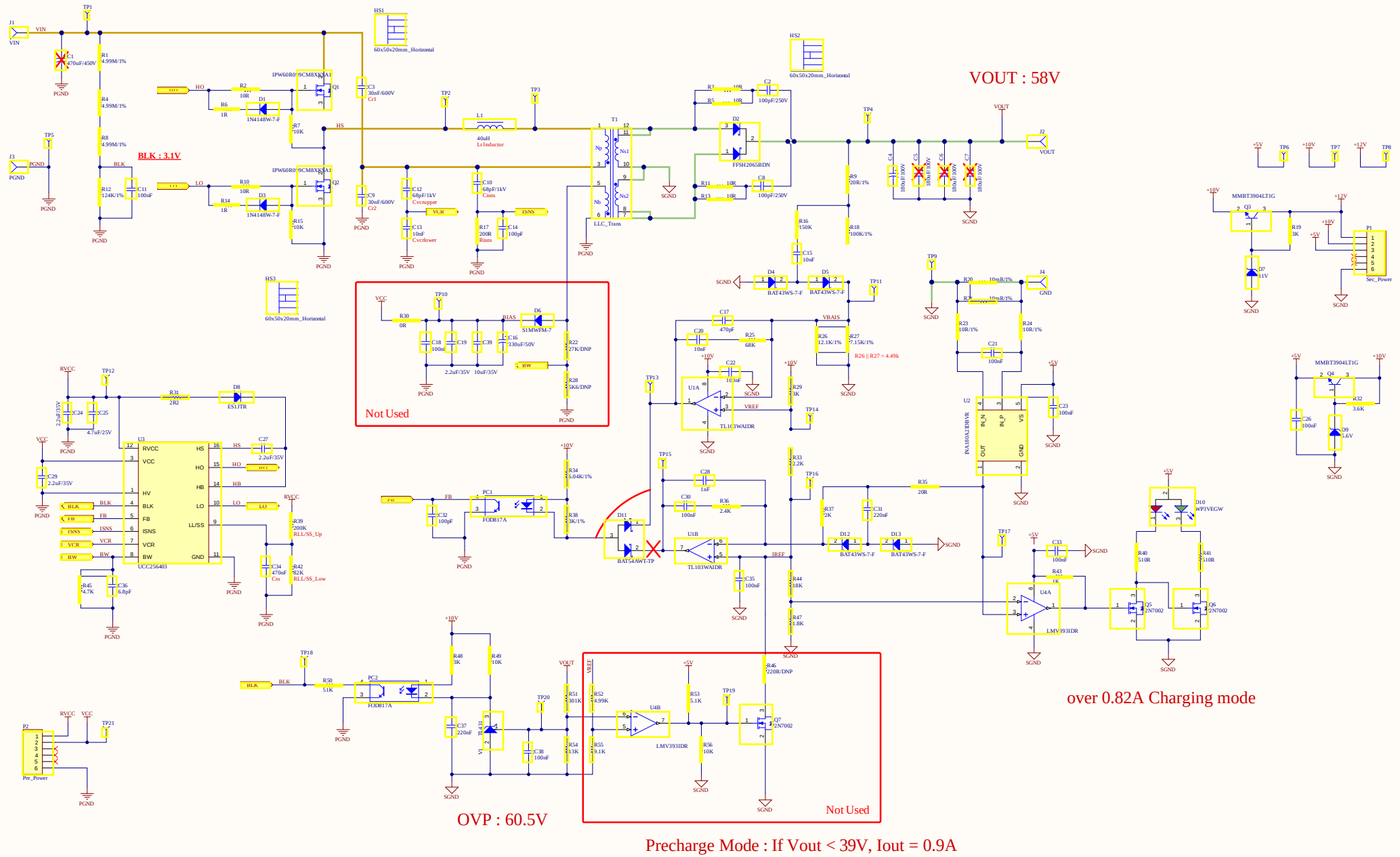

Note.

Document Title: UCC256403 LLC			Number
Size: A2	Project: UCC256403_LLC_550W		Revision: v1.0 2025-10-16
Date: 오후 2:01:37 2025-11-17	Last Modfied : 2025-11-17	Sheet 1 of 1	
SheetName: Sheet1.SchDoc		Drawn By: cemotech inc.	