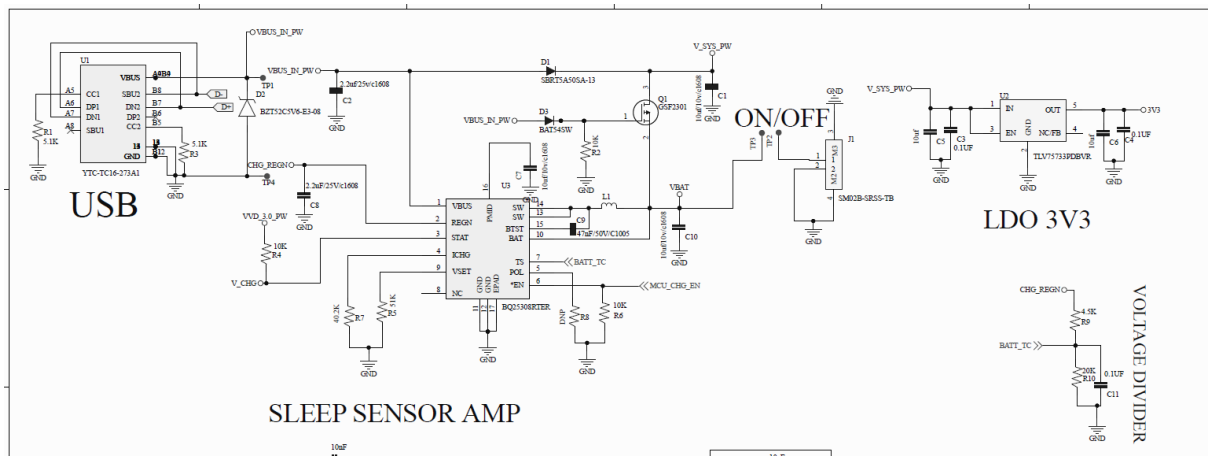
USB
ON/OFF
LDO 3V3
SLEEP SENSOR AMP
VOLTAGE DIVIDER
YTC-TC16-273A1
BZT52C5V6-E3-08
SBRT5A505A-13
BAT545W
QSF2301
BQ25308RTER
TLV75733PDBVR
SM02B-SRSS-TB
VBUS_IN_PW
V_5YS_PW
CHG_REGN
VVD_3.0_PW
V_CHG
VBAT
BATT_TC
MCU_CHG_EN
3V3

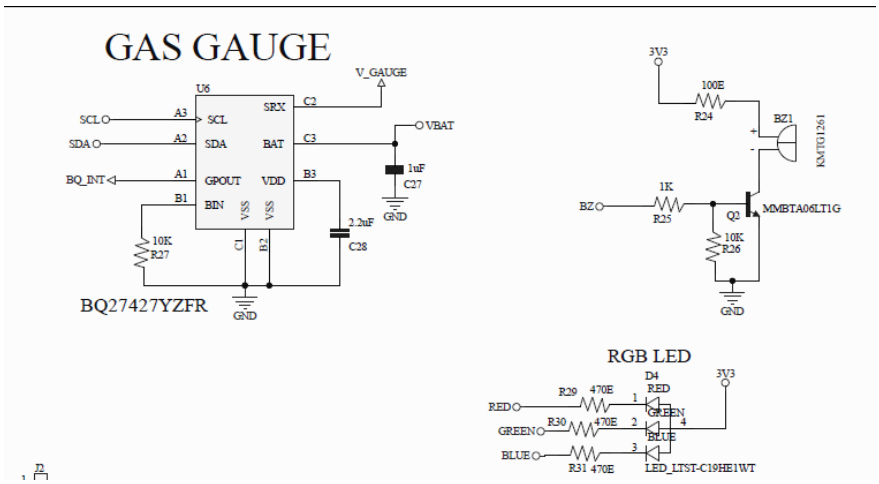
GAS GAUGE
BQ27427YZFR
V_GAUGE
VBAT
SCL
SDA
BQ_INT
RGB LED
RED
GREEN
BLUE
3V3
BZ
BZ1
KMTG1261
MMBTA06LT1G
LED_LTST-C19HE1WT