PVNN
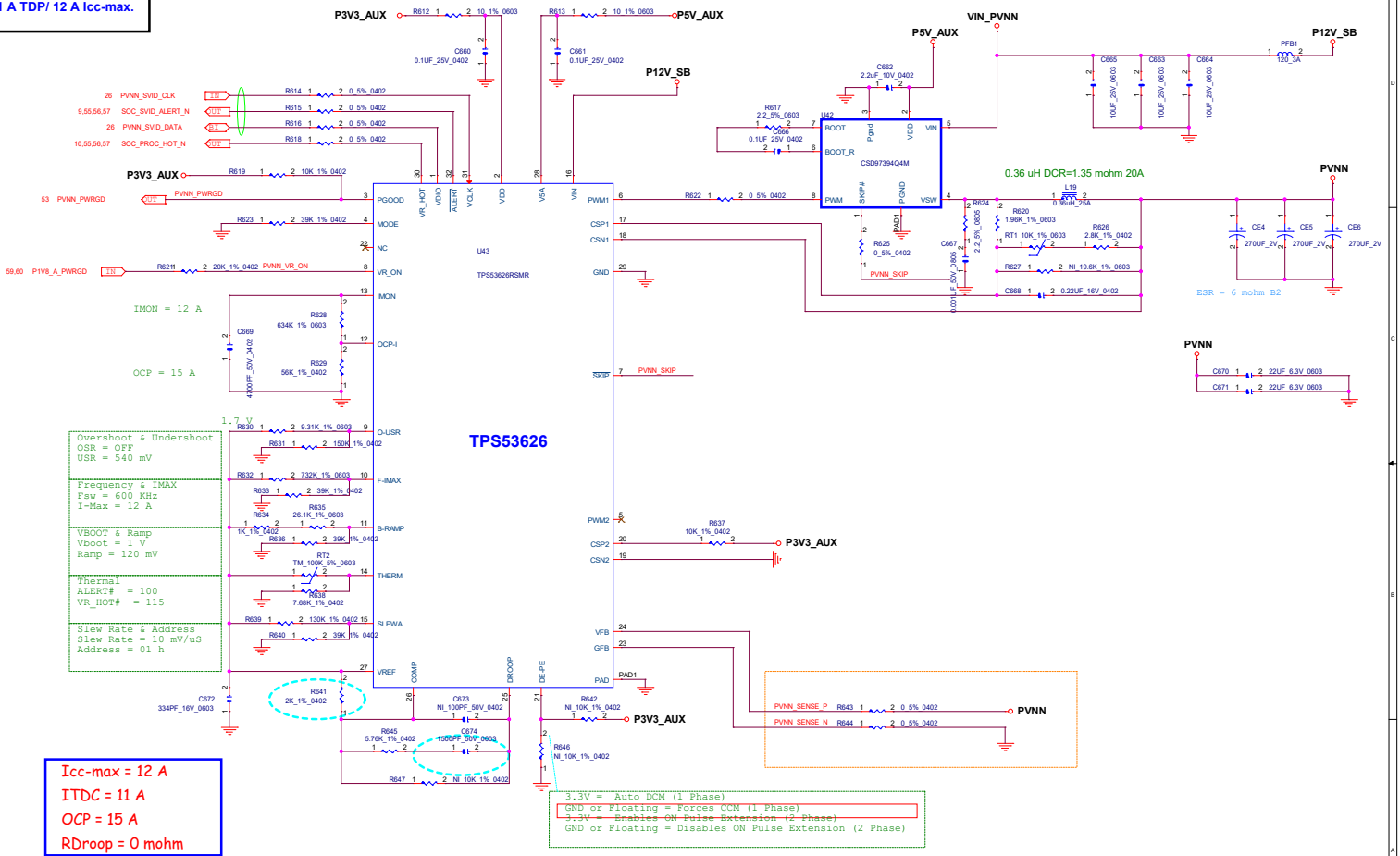
11 A TDP/ 12 A Icc-max.