M1:

L: FPWM mode
H: Skip mode

SOC1_MCU1_CTR

M1:

# SOC1 PRE_15.5V Power Supply Circuit

VFB=0.8V
Vout=0.8*(680+/37.1+1)=15.463V

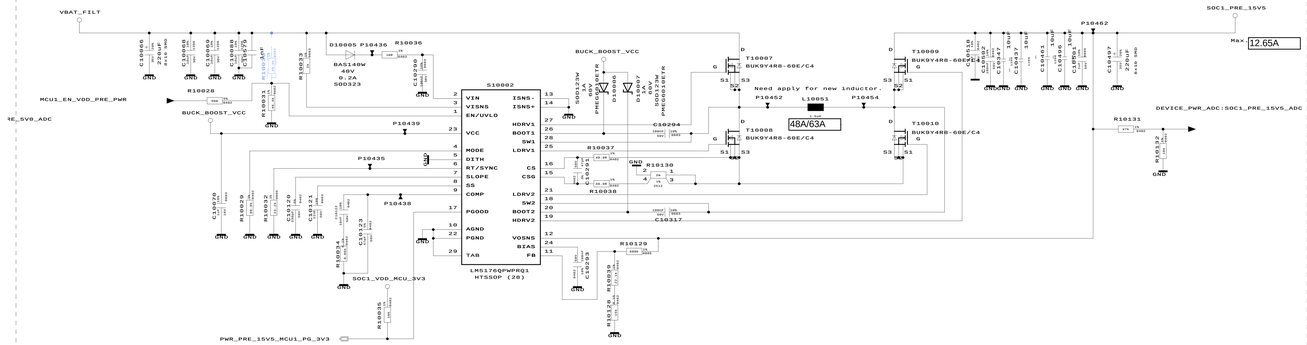


| | DWN | CHK | APP | TITLE | |
|---|---|---|---|---|---|
| NAME | @d_nam | @chk1 | @app_a | @d_nam | CONFIDENTIALITY: A-NO AVAILABILITY: A-OCB |
| DATE | @d_dt | @chk2 | @app_d | @d_not | |
| 2023-05-18 | | For PCB System | | | |
| FILTER | | RELEASE SUMMARY | | | |
| 09:45:21 | @var1a | | | | |
| DIV | ROBERT BOSCH GmbH | | | @partl | CHAP-D: @ecamn |
| DEPT | | | | @dono | Approved-D: @bareb |
| | STUTTGART | | | NO. @partN | |
| Top_level_No: | @top_l | | | Top_level_Title: @top_l | Page 37 of 109 |