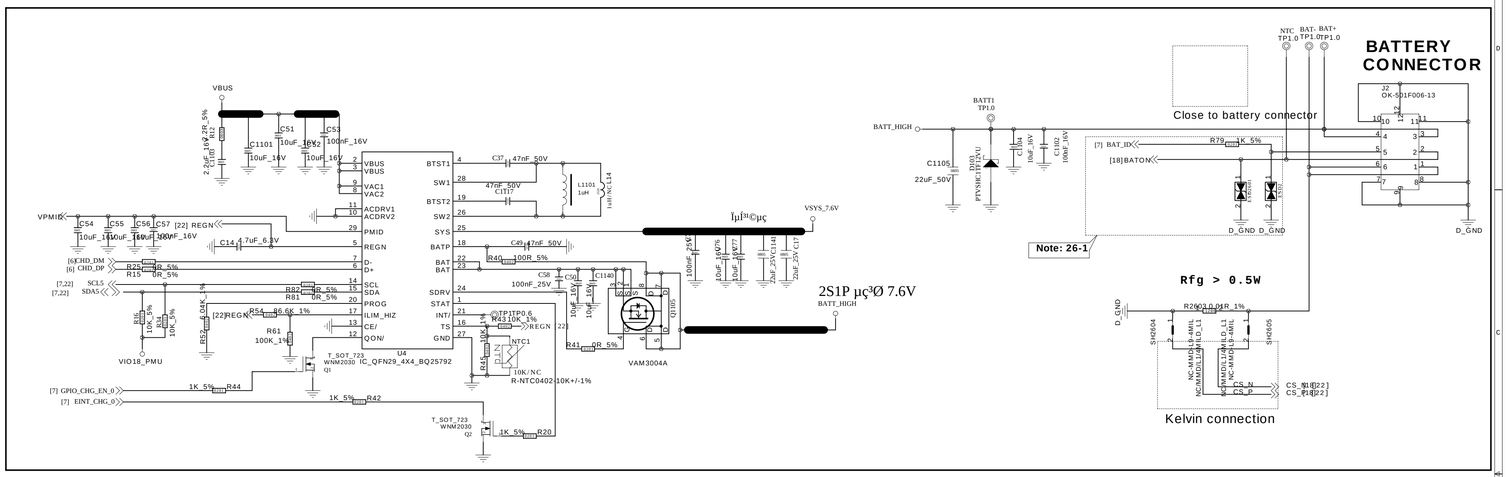

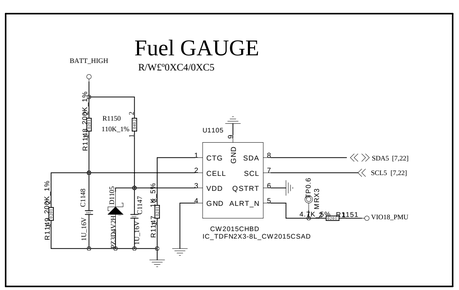

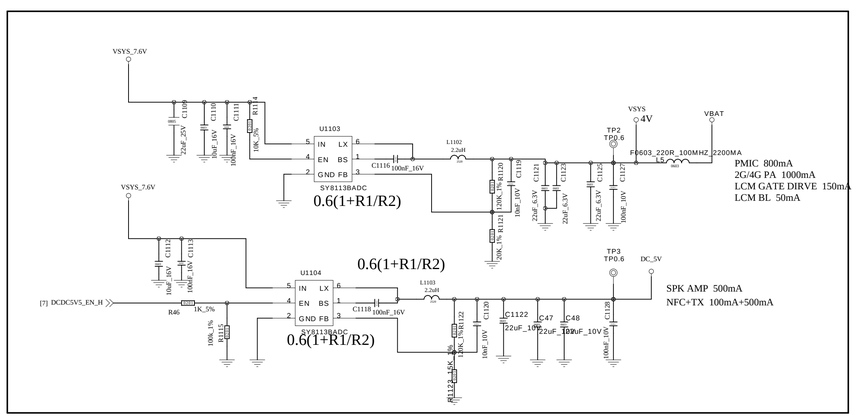

Schematic design notice of "POWER_MT6370-Charger + PP" page.

Note 26-1: For better ESD or surge performance we need choose suitable device for system protection. Please refer to [Surge device selection guide V2.0] provide by MTK.