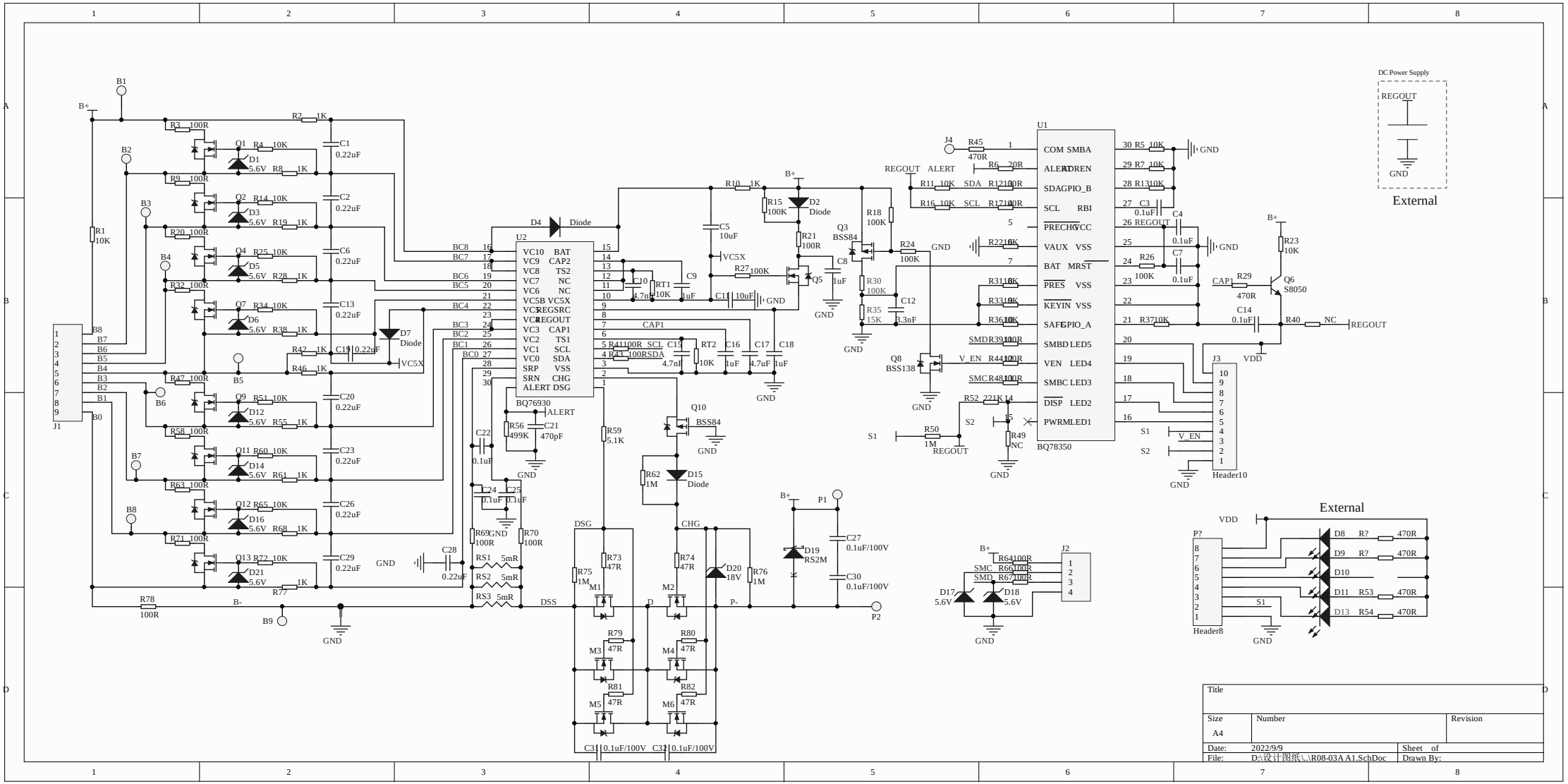

Title		
Size A4	Number	Revision
Date: 2022/9/9		Sheet of
File: D:\设计图纸\..\R08-03A A1.SchDoc		Drawn By: