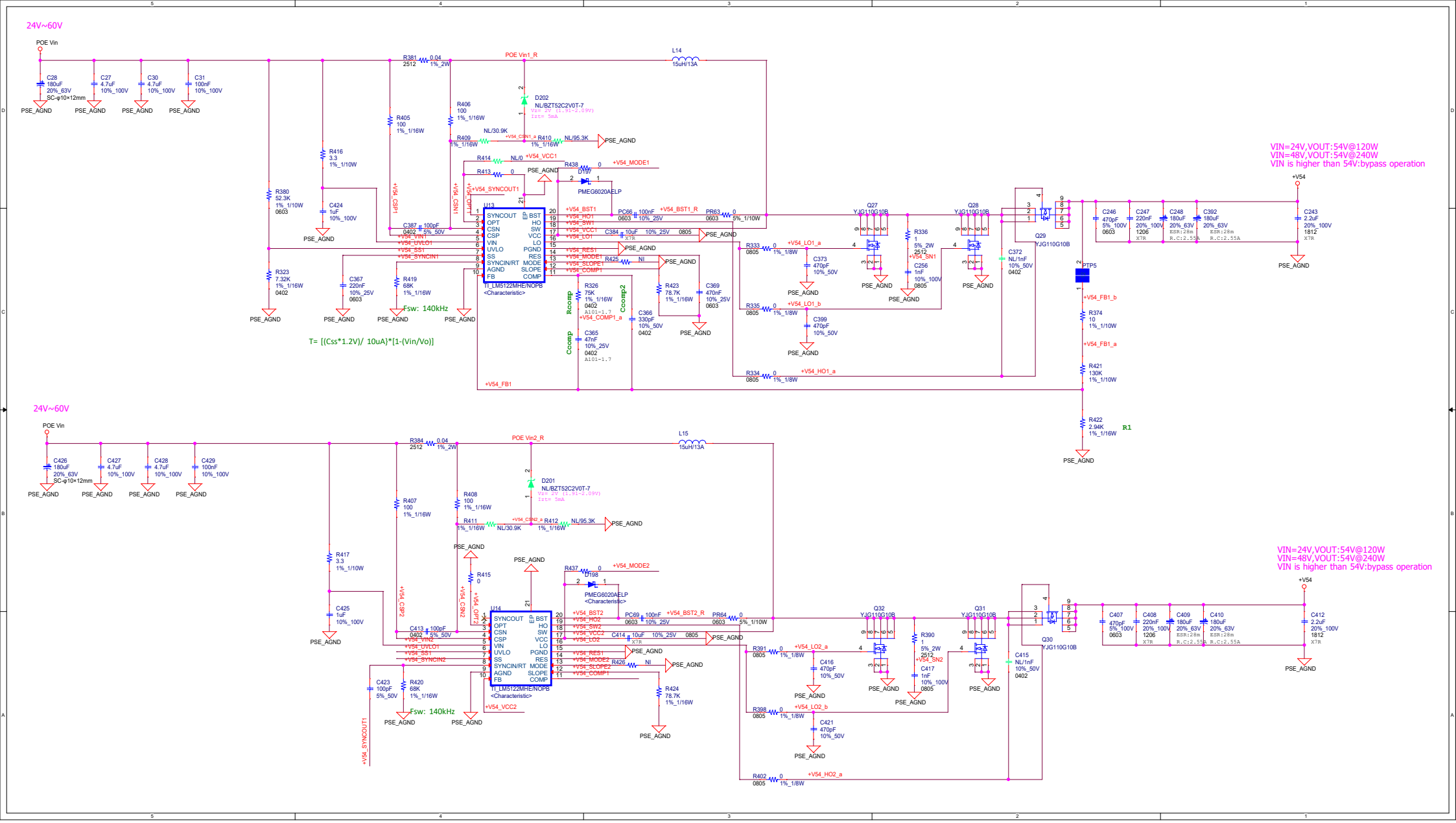
24V~60V
POE Vin
C28 180uF 20%_63V SC-φ10×12mm
C27 4.7uF 10%_100V
C30 4.7uF 10%_100V
C31 100nF 10%_100V
PSE_AGND
R381 2512 0.04 1%_2W
POE Vin1_R
L14 15uH/13A
D202 NL/BZT52C2V0T-7
R405 100 1%_1/16W
R406 100 1%_1/16W
R409 1%_1/16W NL/30.9K
R410 1%_1/16W NL/95.3K
R416 3.3 1%_1/10W
R414 NL/0 +V54_VCC1
R438 0 +V54_MODE1
R413 0
D197 PMEG6020AELP
+V54_SYNCOUT1
R380 52.3K 1%_1/10W 0603
C424 1uF 10%_100V
R323 7.32K 1%_1/16W 0402
C387 100pF 0402 5%_50V
C367 220nF 10%_25V 0603
R419 68K 1%_1/16W
U13
SYNCOUT OPT CSN CSP VIN UVLO SS SYNCIN/RT AGND FB
BST HO SW VCC LO PGND RES MODE SLOPE COMP
TI_LM5122MHE/NOPB
<Characteristic>
Fsw: 140kHz
T= [(Css*1.2V)/ 10uA}*[1-(Vin/Vo)]
+V54_BST1
+V54_HO1
+V54_SW1
+V54_VCC1
+V54_LO1
+V54_RES1
+V54_MODE1
+V54_SLOPE1
+V54_COMP1
PC66 0603 100nF 10% 25V
PR63 0603 0 5%_1/10W
+V54_BST1_R
C384 0805 10uF 10% 25V X7R
R425 NI
R326 0402 75K 1% 1/16W A101-1.7
+V54_COMP1_a
C365 0402 47nF 10%_25V A101-1.7
C366 0402 330pF 10%_50V
R423 1%_1/16W 78.7K
C369 0603 470nF 10%_25V
Rcomp
Ccomp
Ccomp2
+V54_FB1
R333 0805 0 1%_1/8W
+V54_LO1_a
C373 470pF 10%_50V
R335 0805 0 1%_1/8W
+V54_LO1_b
C399 470pF 10%_50V
R334 0805 0 1%_1/8W
+V54_HO1_a
Q27 YJG110G10B
Q28 YJG110G10B
R336 2512 1 5%_2W
+V54_SN1
C256 0805 1nF 10%_100V
C372 0402 NL/1nF 10%_50V
Q29 YJG110G10B
PTP5
+V54_FB1_b
R374 10 1%_1/10W
+V54_FB1_a
R421 130K 1%_1/10W
R422 2.94K 1%_1/16W
R1
C246 0603 470pF 5%_100V
C247 1206 220nF 20%_100V X7R
C248 180uF 20%_63V ESR:28m R.C:2.55A
C392 180uF 20%_63V ESR:28m R.C:2.55A
C243 1812 2.2uF 20%_100V X7R
+V54
VIN=24V,VOUT:54V@120W
VIN=48V,VOUT:54V@240W
VIN is higher than 54V:bypass operation
24V~60V
POE Vin
C426 180uF 20%_63V SC-φ10×12mm
C427 4.7uF 10%_100V
C428 4.7uF 10%_100V
C429 100nF 10%_100V
R384 2512 0.04 1%_2W
POE Vin2_R
L15 15uH/13A
D201 NL/BZT52C2V0T-7
R407 100 1%_1/16W
R408 100 1%_1/16W
R411 1%_1/16W NL/30.9K
R412 1%_1/16W NL/95.3K
R417 3.3 1%_1/10W
R415 0
R437 0 +V54_MODE2
D198 PMEG6020AELP
C425 1uF 10%_100V
C413 0402 100pF 5%_50V
C423 100pF 5%_50V
R420 68K 1%_1/16W
U14
SYNCOUT OPT CSN CSP VIN UVLO SS SYNCIN/RT AGND FB
BST HO SW VCC LO PGND RES MODE SLOPE COMP
TI_LM5122MHE/NOPB
<Characteristic>
Fsw: 140kHz
+V54_VCC2
+V54_SYNCOUT1
+V54_BST2
+V54_HO2
+V54_SW2
+V54_VCC2
+V54_LO2
+V54_RES1
+V54_MODE2
+V54_SLOPE2
+V54_COMP1
PC69 0603 100nF 10% 25V
PR64 0603 0 5%_1/10W
+V54_BST2_R
C414 0805 10uF 10% 25V X7R
R426 NI
R424 1%_1/16W 78.7K
R391 0805 0 1%_1/8W
+V54_LO2_a
C416 470pF 10%_50V
R398 0805 0 1%_1/8W
+V54_LO2_b
C421 470pF 10%_50V
R402 0805 0 1%_1/8W
+V54_HO2_a
Q32 YJG110G10B
Q31 YJG110G10B
R390 1 5%_2W
+V54_SN2
C417 0805 1nF 10%_100V
C415 0402 NL/1nF 10%_50V
Q30 YJG110G10B
C407 0603 470pF 5%_100V
C408 1206 220nF 20%_100V X7R
C409 180uF 20%_63V ESR:28m R.C:2.55A
C410 180uF 20%_63V ESR:28m R.C:2.55A
C412 1812 2.2uF 20%_100V X7R
+V54
VIN=24V,VOUT:54V@120W
VIN=48V,VOUT:54V@240W
VIN is higher than 54V:bypass operation