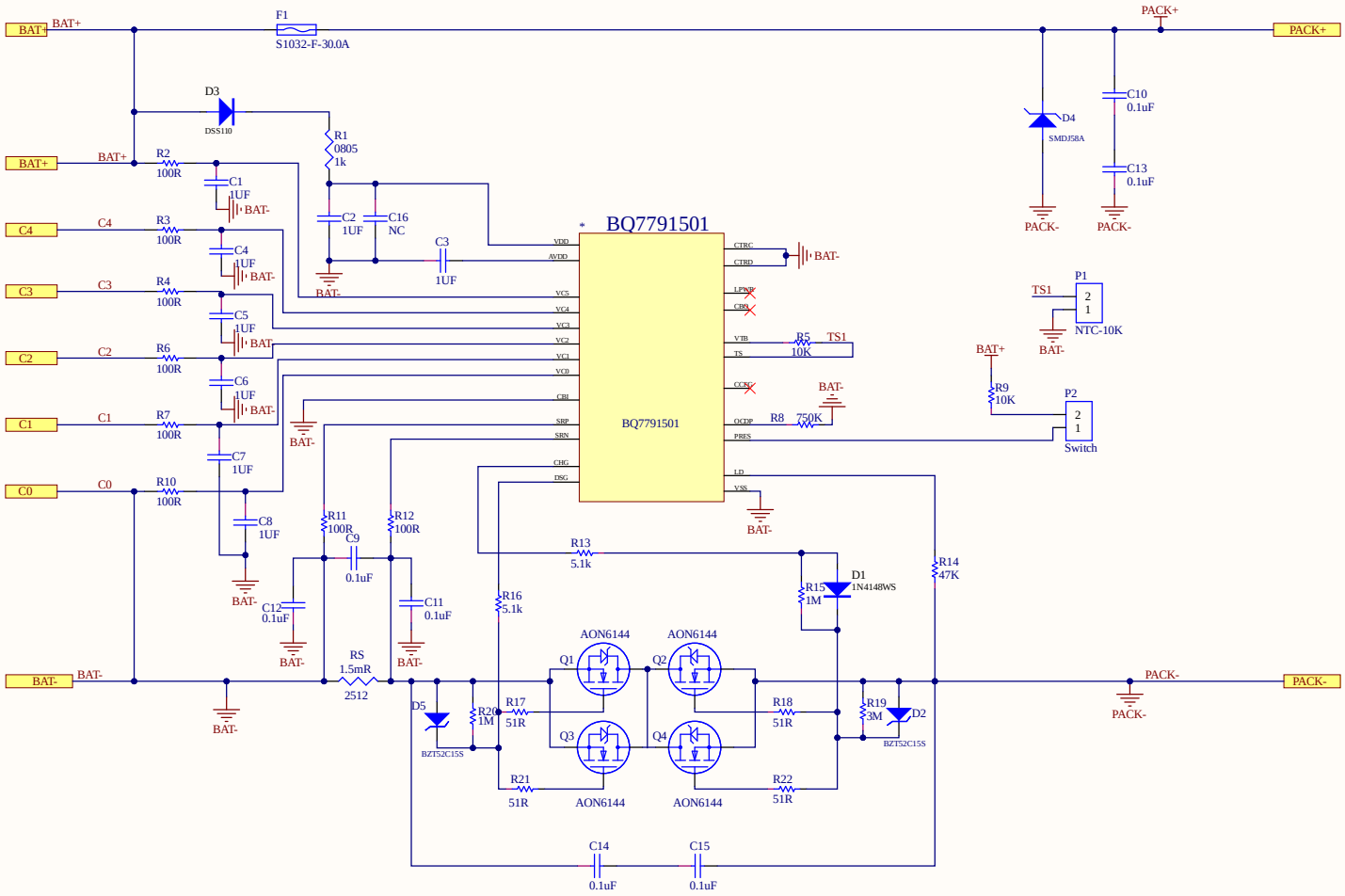

Title		
Size B	Number	Revision
Date: 10/30/2024		Sheet of
File: C:\Users\..\Schematic-15A.SchDoc		Drawn By: