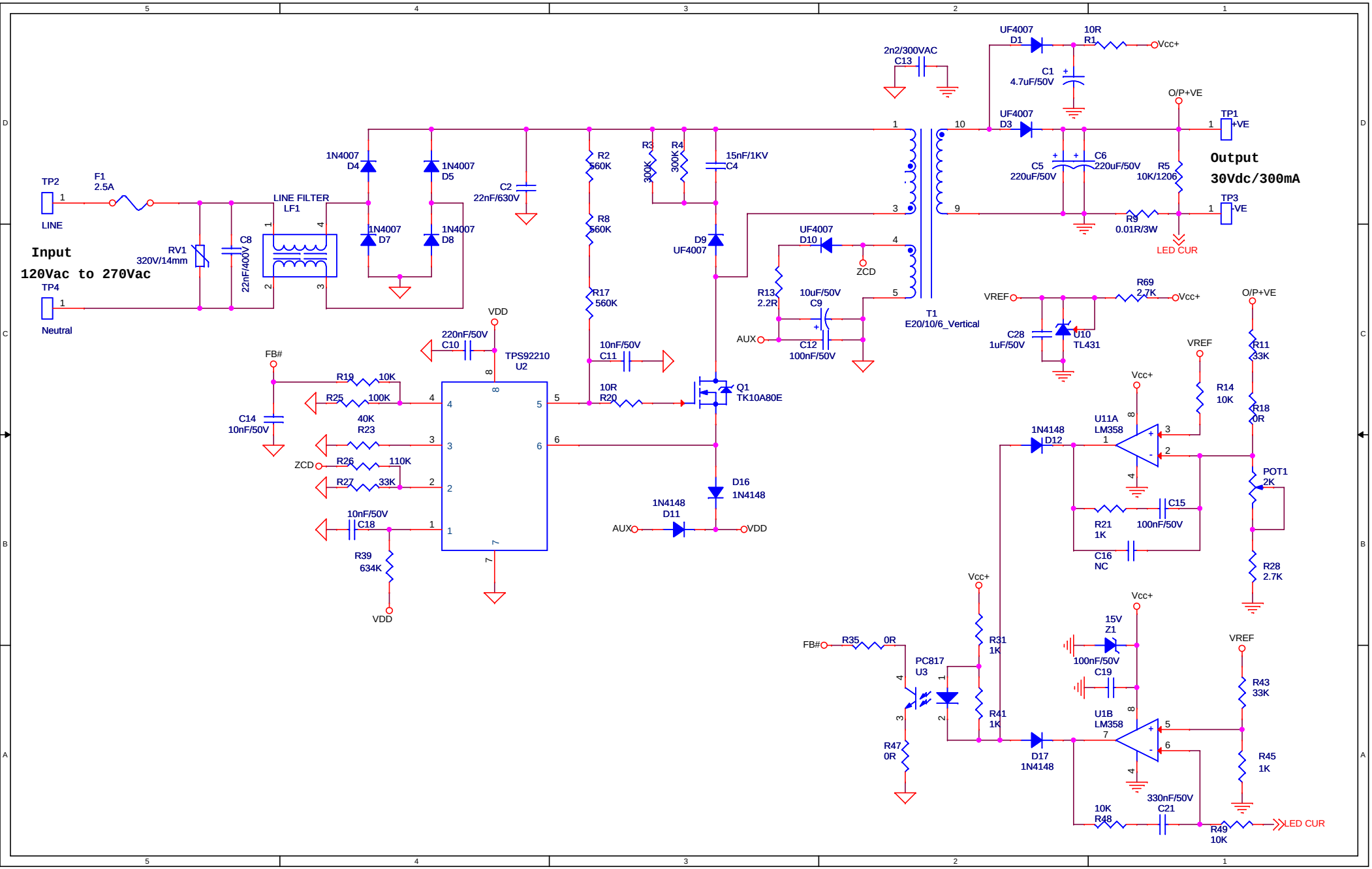
Input
120Vac to 270Vac
TP2
LINE
TP4
Neutral
F1
2.5A
RV1
320V/14mm
C8
22nF/400V
LINE FILTER
LF1
1N4007
D4
1N4007
D5
1N4007
D7
1N4007
D8
C2
22nF/630V
R2
560K
R8
560K
R17
560K
R3
300K
R4
300K
15nF/1KV
C4
D9
UF4007
2n2/300VAC
C13
UF4007
D1
10R
R1
Vcc+
C1
4.7uF/50V
UF4007
D3
O/P+VE
TP1
+VE
TP3
-VE
Output
30Vdc/300mA
C5
220uF/50V
C6
220uF/50V
R5
10K/1206
R9
0.01R/3W
LED CUR
T1
E20/10/6_Vertical
UF4007
D10
ZCD
R13
2.2R
10uF/50V
C9
C12
100nF/50V
AUX
VREF
R69
2.7K
C28
1uF/50V
U10
TL431
VDD
220nF/50V
C10
TPS92210
U2
FB#
R19
10K
R25
100K
40K
R23
R26
110K
R27
33K
10nF/50V
C18
R39
634K
C14
10nF/50V
10nF/50V
C11
10R
R20
Q1
TK10A80E
D16
1N4148
1N4148
D11
R11
33K
R14
10K
R18
0R
U11A
LM358
1N4148
D12
POT1
2K
R21
1K
C15
100nF/50V
C16
NC
R28
2.7K
R35
0R
PC817
U3
R47
0R
R31
1K
R41
1K
D17
1N4148
15V
Z1
100nF/50V
C19
U1B
LM358
R43
33K
R45
1K
330nF/50V
C21
10K
R48
R49
10K