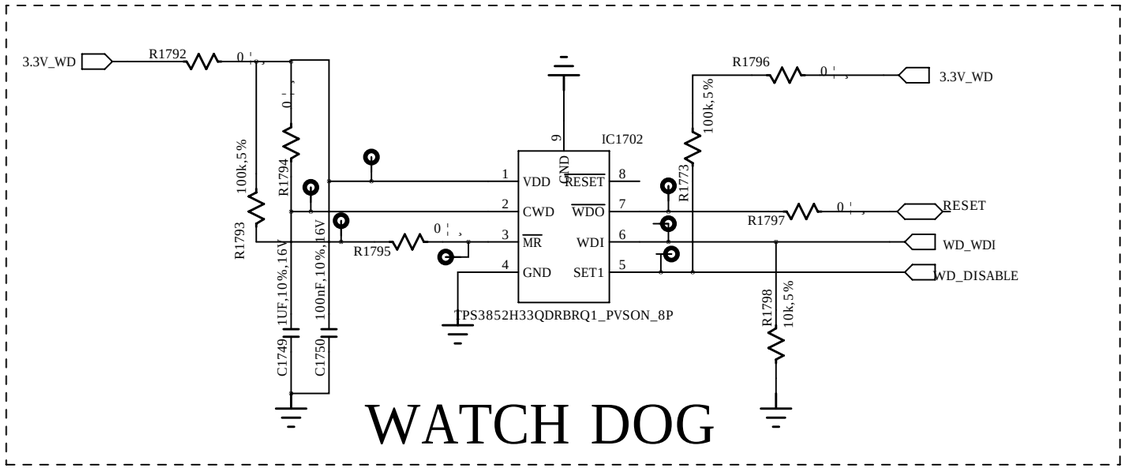
3.3V_WD
R1792
0
R1794
0
100k,5%
R1793
1UF,10%,16V
C1749
100nF,10%,16V
C1750
R1795
0
IC1702
VDD
CWD
MR
GND
RESET
WDO
WDI
SET1
GND
9
1
2
3
4
8
7
6
5
TPS3852H33QDRBRQ1_PVSON_8P
R1796
0
3.3V_WD
100k,5%
R1773
R1797
0
RESET
WD_WDI
WD_DISABLE
R1798
10k,5%
WATCH DOG