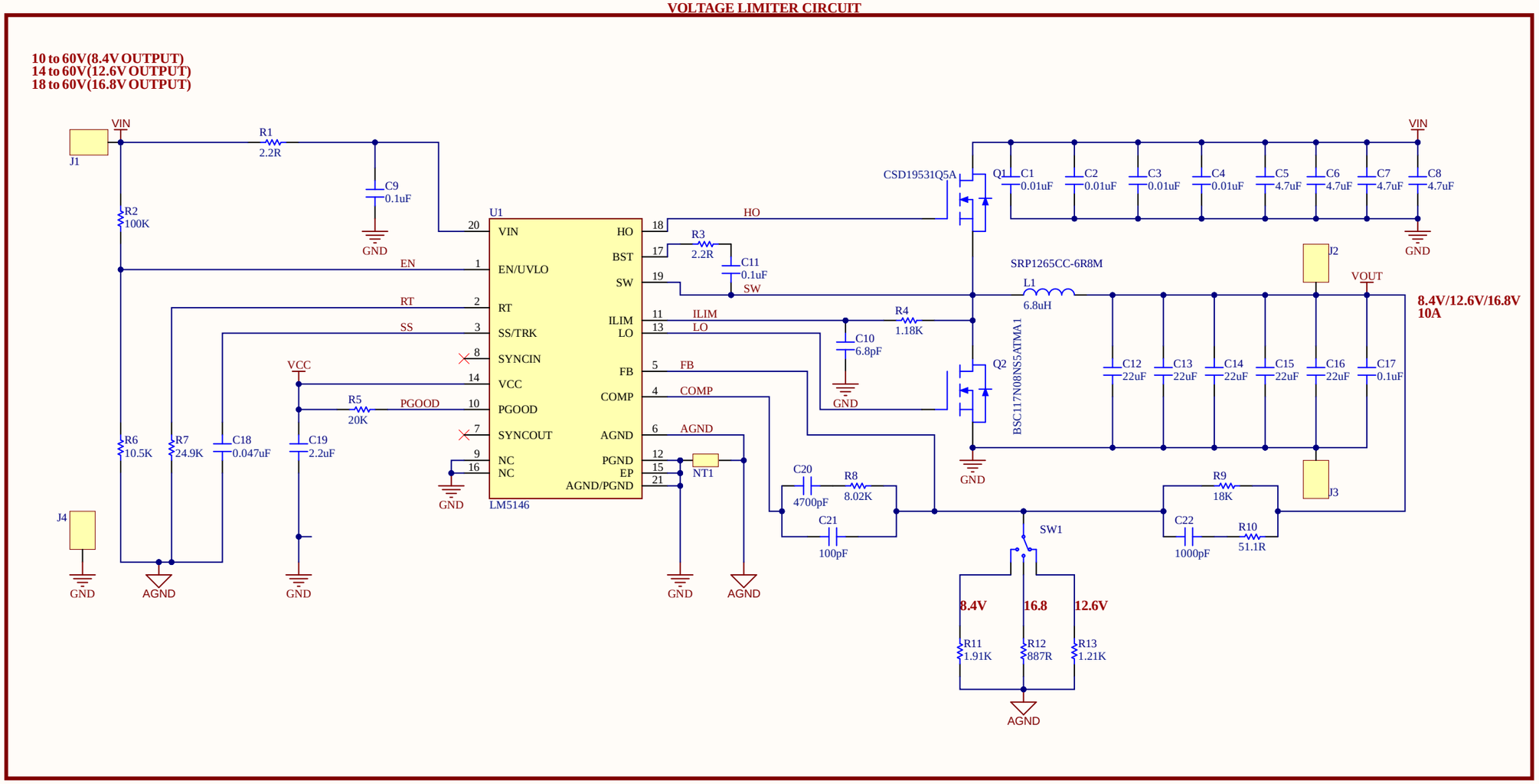VOLTAGE LIMITER CIRCUIT