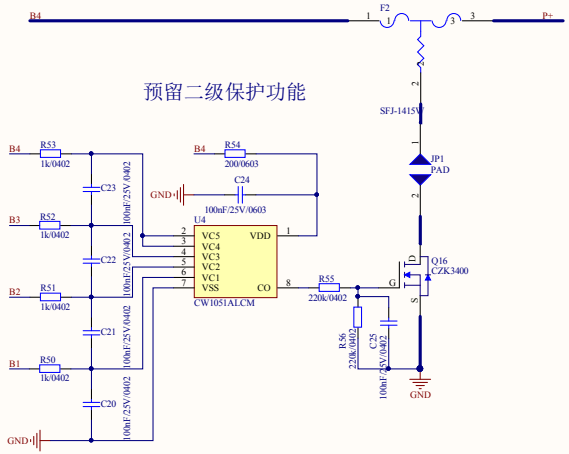

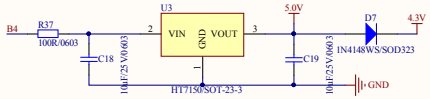

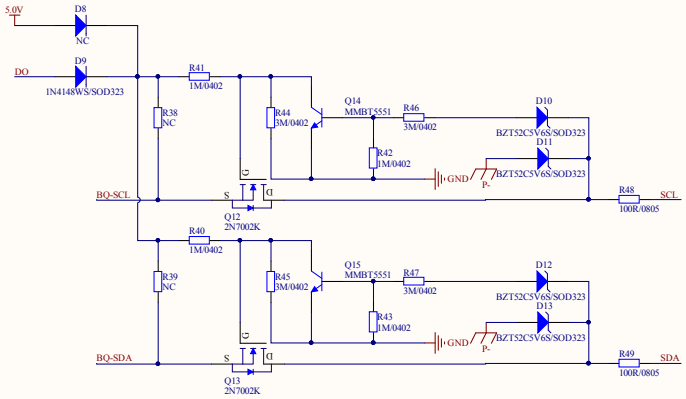

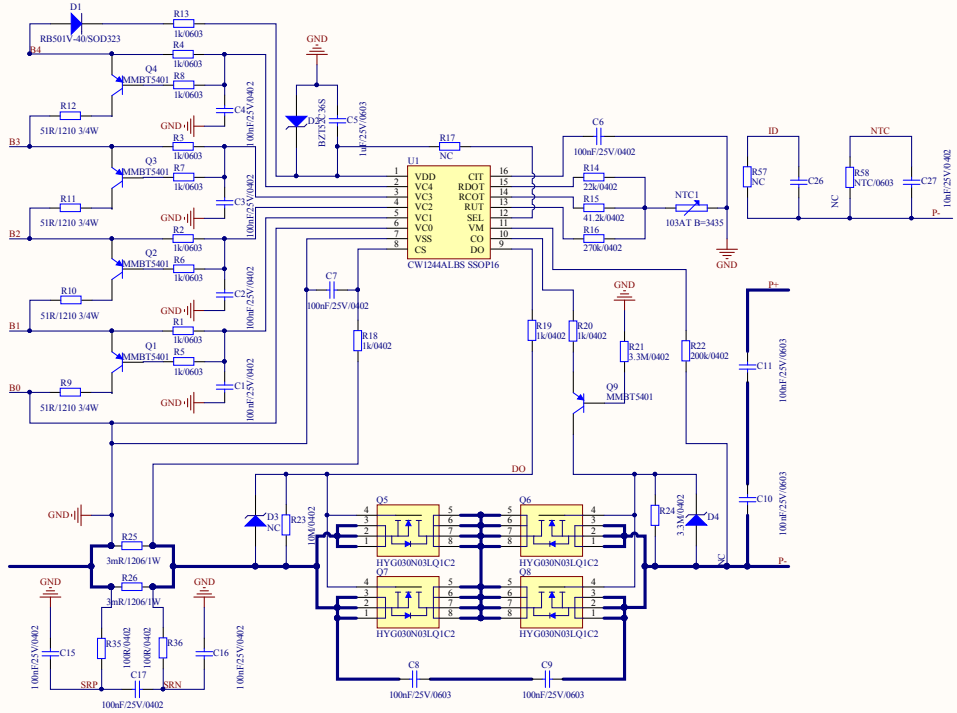

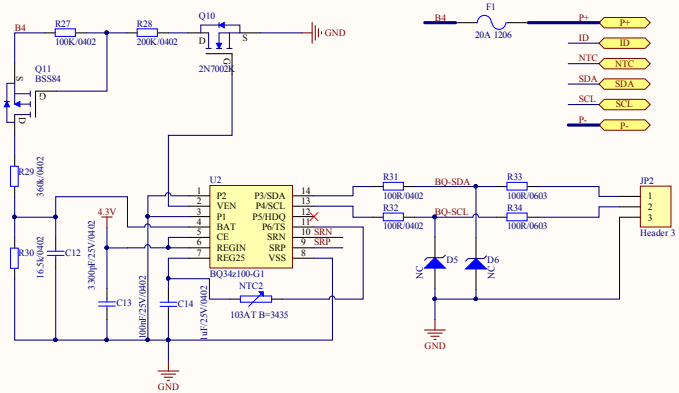

Title		
Size C	Number	Revision
Date: 2023/10/24	Sheet of	
File: E:\刘宏哲\B0859\PCB 2\B0859-V1.0.SchDoc	Drawn By:	