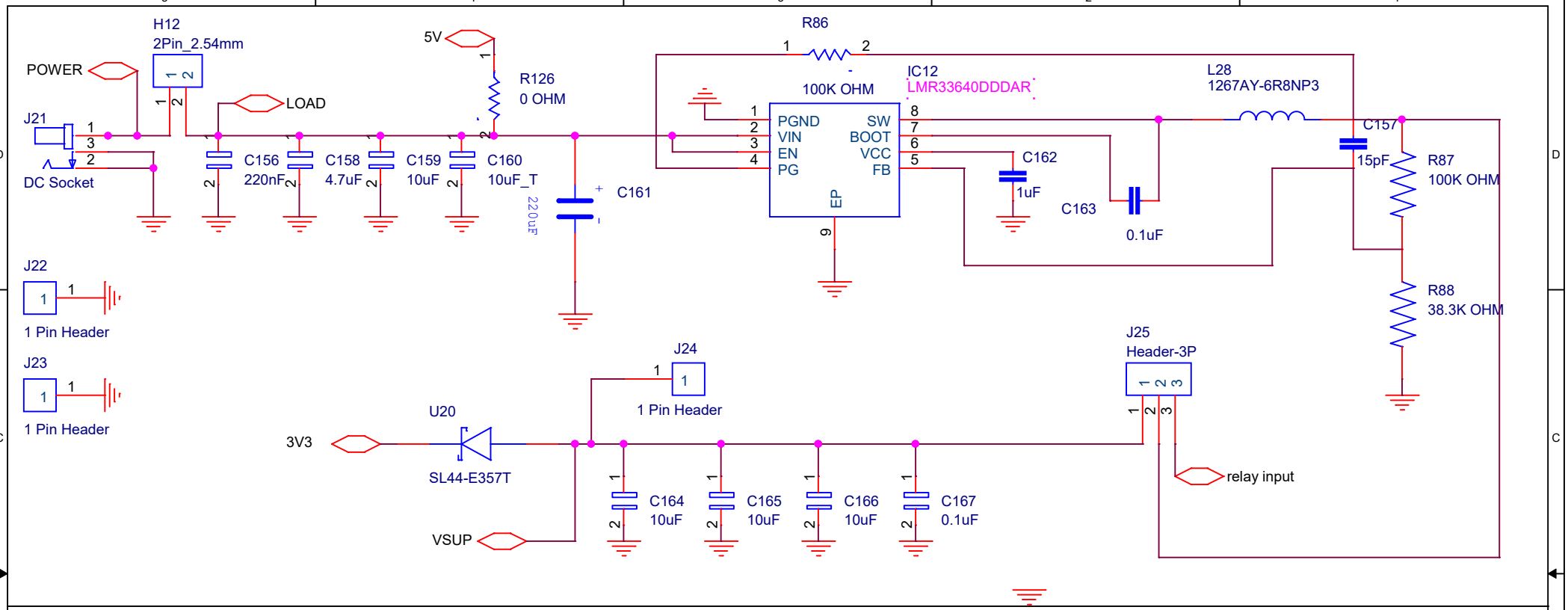

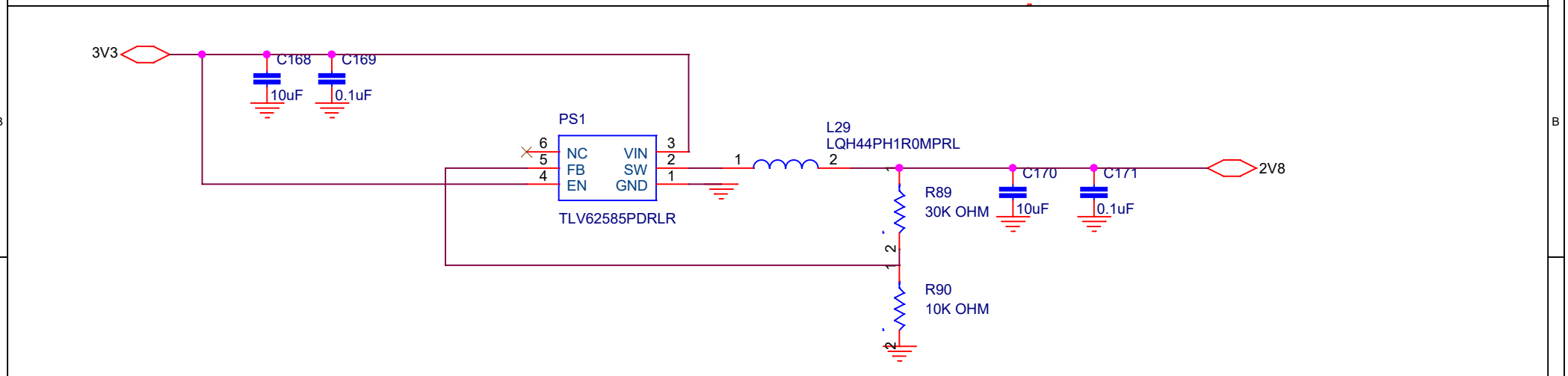

Title <Title>		
Size A	Document Number <Doc>	Rev <RevCo
Date: Friday, November 27, 2020	Sheet 15 of 17	