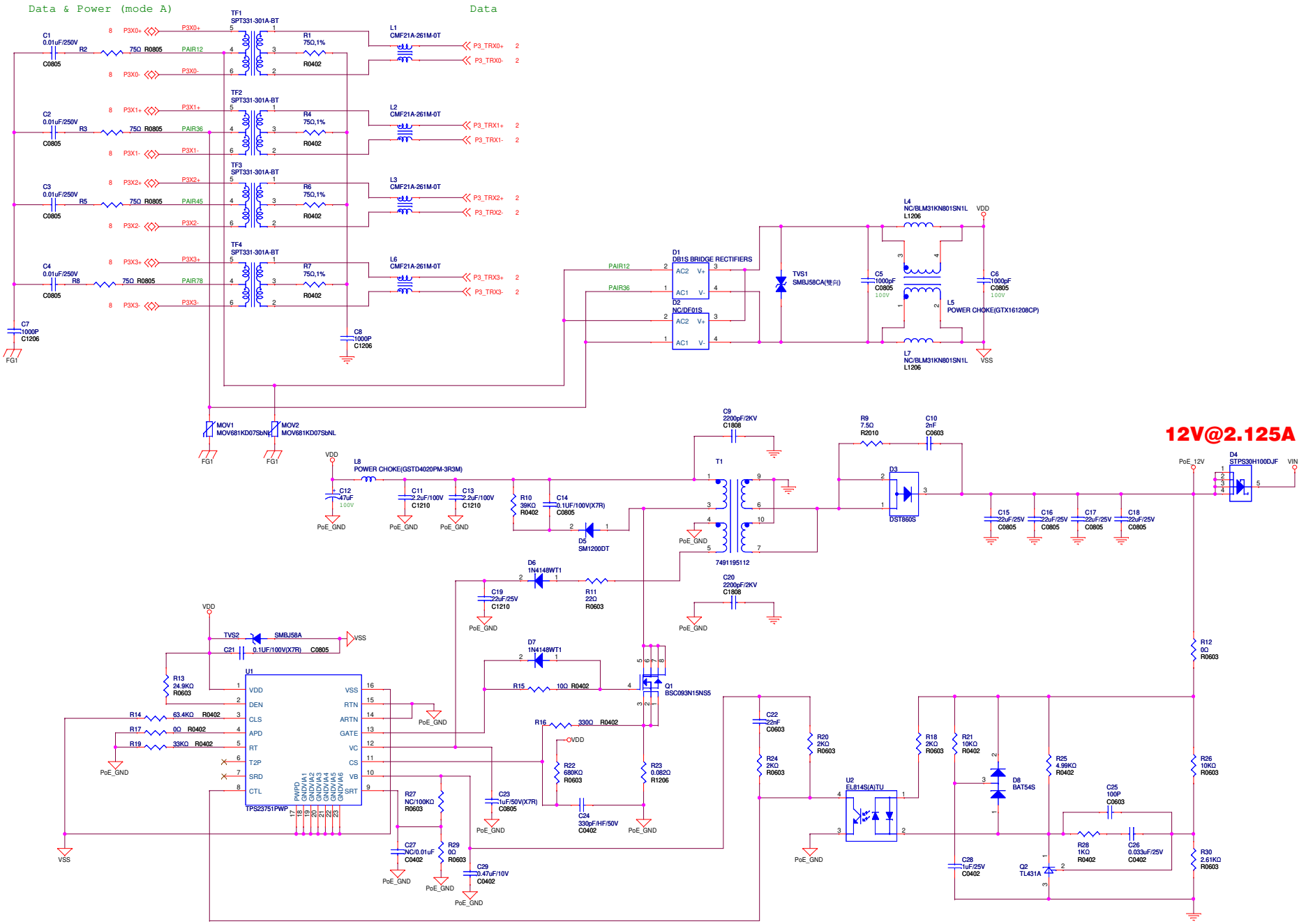
Data & Power (mode A)
Data
12V@2.125A
TF1 SPT331-301A-BT
TF2 SPT331-301A-BT
TF3 SPT331-301A-BT
TF4 SPT331-301A-BT
L1 CMF21A-261M-0T
L2 CMF21A-261M-0T
L3 CMF21A-261M-0T
L6 CMF21A-261M-0T
P3_TRX0+
P3_TRX0-
P3_TRX1+
P3_TRX1-
P3_TRX2+
P3_TRX2-
P3_TRX3+
P3_TRX3-
D1 DB1S BRIDGE RECTIFIERS
D2 NC/DF01S
TVS1 SMBJ58CA(雙向)
L4 NC/BLM31KN801SN1L L1206
L5 POWER CHOKE(GTX161208CP)
L7 NC/BLM31KN801SN1L L1206
MOV1 MOV681KD07SbNL
MOV2 MOV681KD07SbNL
L8 POWER CHOKE(GSTD4020PM-3R3M)
T1
7491195112
D3 DST860S
D4 STPS30H100DJF
Q1 BSC093N15NS5
U1 TPS23751PWP
U2 EL814S(A)TU
D8 BAT54S
Q2 TL431A
PoE_12V
VIN
VDD
VSS
PoE_GND
FG1