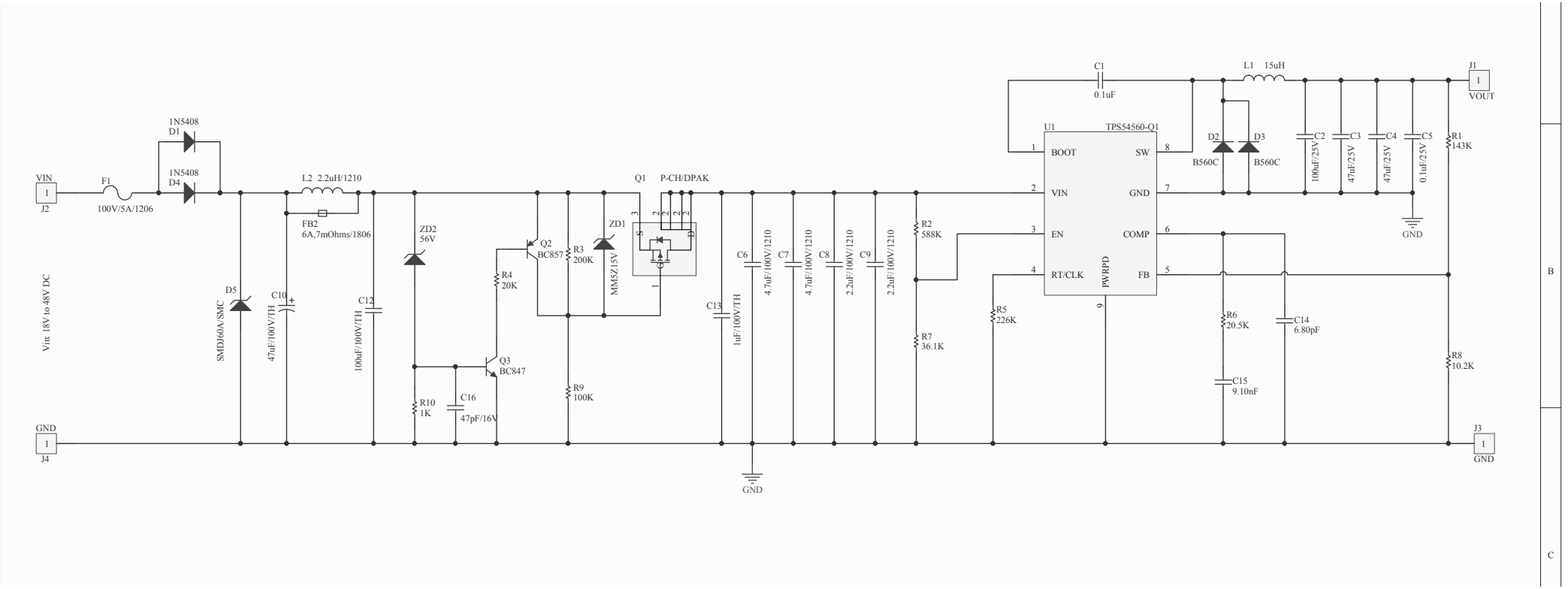
VIN
J2
F1
100V/5A/1206
1N5408
D1
1N5408
D4
Vin: 18V to 48V DC
GND
J4
D5
SMDJ60A/SMC
C10
47uF/100V/TH
L2 2.2uH/1210
FB2
6A,7mOhms/1806
C12
100uF/100V/TH
ZD2
56V
R10
1K
C16
47pF/16V
R4
20K
Q2
BC857
Q3
BC847
R3
200K
R9
100K
ZD1
MMSZ15V
Q1
P-CH/DPAK
C13
1uF/100V/TH
C6
4.7uF/100V/1210
C7
4.7uF/100V/1210
C8
2.2uF/100V/1210
C9
2.2uF/100V/1210
R2
588K
R7
36.1K
R5
226K
C1
0.1uF
U1
TPS54560-Q1
BOOT
VIN
EN
RT/CLK
SW
GND
COMP
FB
PWRPD
L1 15uH
D2
B560C
D3
B560C
C2
100uF/25V
C3
47uF/25V
C4
47uF/25V
C5
0.1uF/25V
R6
20.5K
C15
9.10nF
C14
6.80pF
R1
143K
R8
10.2K
J1
VOUT
J3
GND