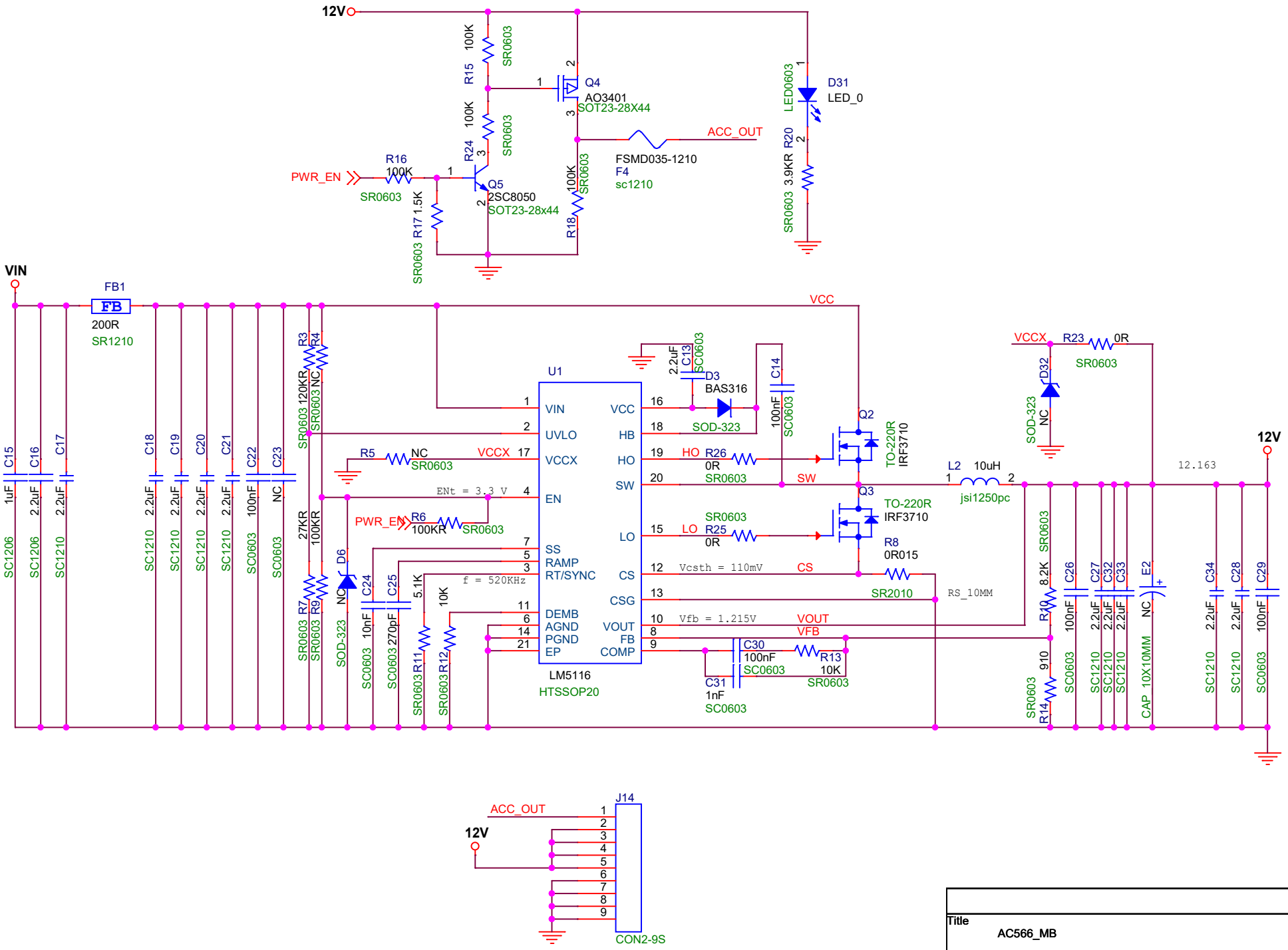

Title	AC566_MB	
Size A4	Document Number <Doc>	Rev 200
Date: Wednesday, December 12, 2018	Sheet 2 of 2	