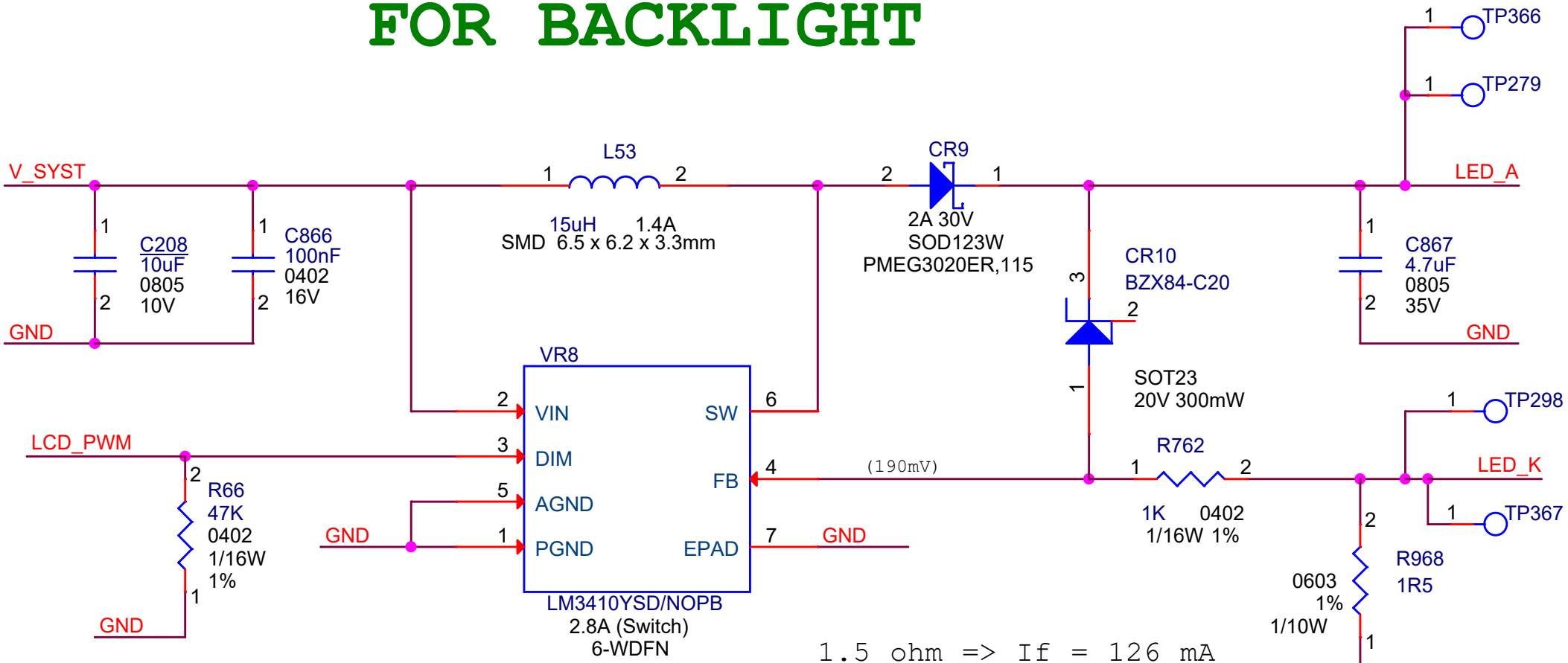STEP-UP CONVERTER FOR BACKLIGHT