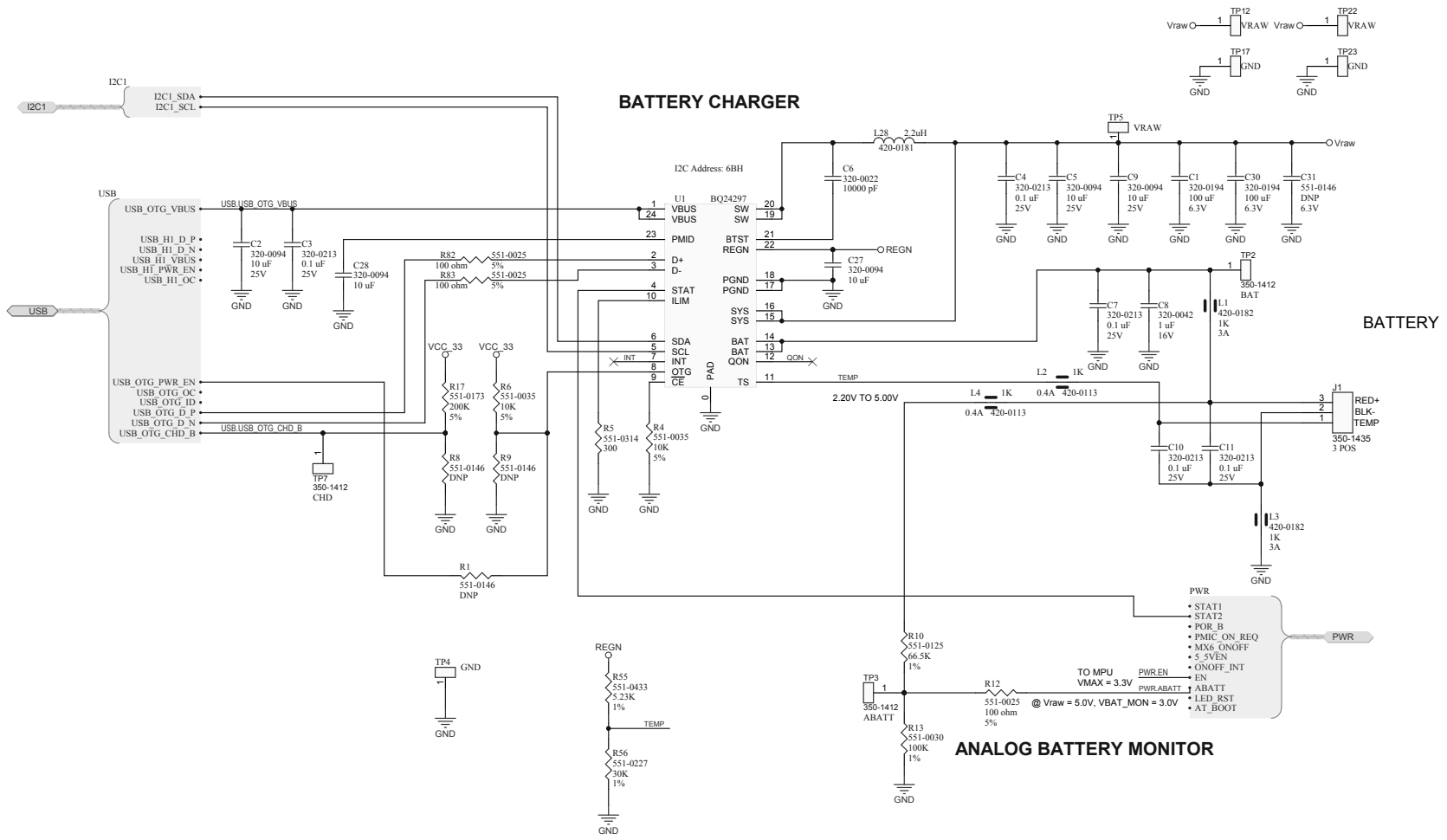

STANDARD
ALL DIMENSIONS ARE IN MILS
UNLESS OTHERWISE SPECIFIED.

THIRD ANGLE PROJECTION

DO NOT SCALE DRAWING

TOLERANCES
FORM 009-0636-02 REVISION A
UNLESS OTHERWISE SPECIFIED:

HOLE DIAMETER: +/- 2.00 MILS NON-PLATED
+/- 3.00 MILS PLATED
HOLE LOCATION: +/- 5.00 MILS
BOARD OUTLINE: +/- 5.00 MILS
BOARD THICKNESS: +/- 15% NOM. THICKNESS

DIRECTIVE 2002/95/EC OR RESTRICTION OF HAZARDOUS SUBSTANCES (RoHS) COMPLIANCE DECLARATION ON SHEET 1

UNLESS OTHERWISE SPECIFIED, THIS PCB SHALL COMPLY WITH ALL ASPECTS OF IPC-600 CLASS II.
ALL SOLDER JOINTS MUST MEET IPC-610 REV D CLASS 1
FINISHED ASSEMBLY MUST BE DMF FREE AND REACH COMPLIANT.

NOTES:

REV	X18-091	4/23/2018
K	ECO #	DATE

INSPECTRON

THIS DOCUMENT CONTAINS INFORMATION PROPRIETARY TO INSPECTRON AND SHALL NOT BE DISCLOSED TO OTHERS OR USED FOR ENGINEERING, DESIGN, PROCUREMENT OR MANUFACTURE IN WHOLE OR IN PART WITHOUT THE WRITTEN CONSENT OF INSPECTRON.

TITLE
ITB200 Base Board
BATTERY CHARGER

PART NO. 495-0551

SHT. 5 OF 35