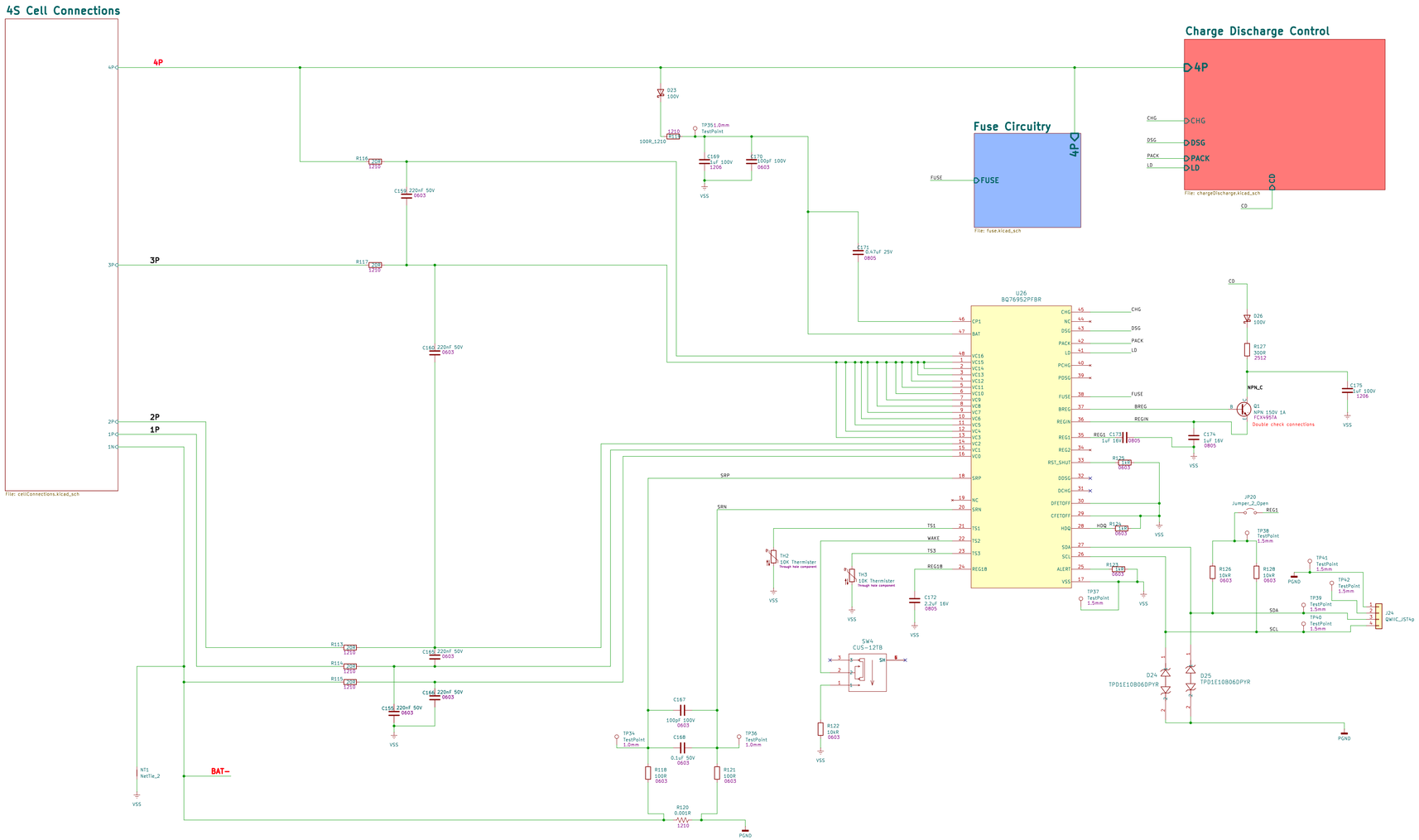
4S Cell Connections
4P
3P
2P
1P
1N
File: cellConnections.kicad_sch
Charge Discharge Control
4P
CHG
DSG
PACK
LD
CD
File: chargeDischarge.kicad_sch
Fuse Circuitry
FUSE
4P
File: fuse.kicad_sch
U26
BQ76952PFBR
D23
100V
100R_1210
TP35 1.0mm TestPoint
C169 1uF 100V 1206
C170 100pF 100V 0603
R116 20Ω 1210
R117 20Ω 1210
C159 220nF 50V 0603
C160 220nF 50V 0603
C172 0.47uF 25V 0805
D26
100V
R127
300R
2512
C175
1uF 100V
1206
Q1
NPN 150V 1A
FCX491TA
Double check connections
NPN_C
C174
1uF 16V
0805
REG1 C173
1uF 16V 0805
R125
0603
R124
0603
R123
0603
JP20
Jumper_2_Open
TP38
TestPoint
1.5mm
R126
10kR
0603
R128
10kR
0603
TP41
TP42
TP39
TP40
J24
QWIIC_JST4p
D24
TPD1E10B06DPYR
D25
TPD1E10B06DPYR
PGND
TH2
10K Thermister
Through hole component
TH3
10K Thermister
Through hole component
C172
2.2uF 16V
0805
TP37
TestPoint
1.5mm
SW4
CUS-12TB
R122
10kR
0603
R113 100Ω 1210
R114 100Ω 1210
R115 100Ω 1210
C165 220nF 50V 0603
C166 220nF 50V 0603
C167
100pF 100V
0603
C168
0.1uF 50V
0603
TP34
TestPoint
1.0mm
TP36
TestPoint
1.0mm
R118
100R
0603
R121
100R
0603
R120
0.001R
1210
NT1
NetTie_2
BAT−
VSS
SRP
SRN
TS1
WAKE
TS3
REG1B
SDA
SCL

4P
3P
2P
1P
1N
BT4
21700_Cell
BT3
21700_Cell
BT2
21700_Cell
BT1
21700_Cell

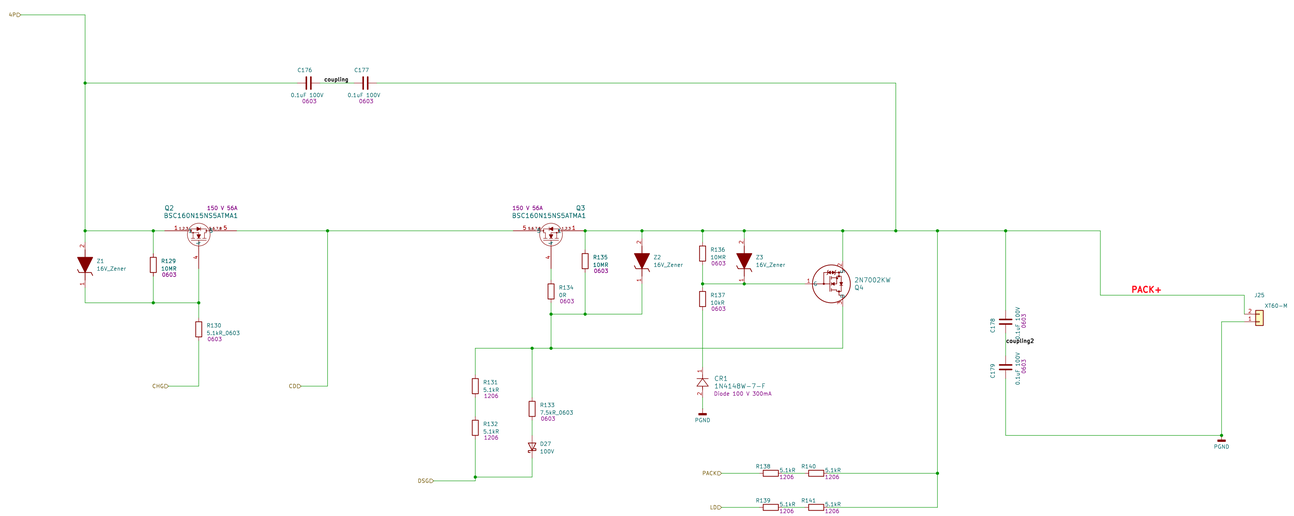
4PD
C176
coupling
C177
0.1uF 100V
0603
0.1uF 100V
0603
Q2
150 V 56A
BSC160N15NS5ATMA1
Q3
150 V 56A
BSC160N15NS5ATMA1
Z1
16V_Zener
R129
10MR
0603
R130
5.1kR_0603
0603
CHGD
CDD
R135
10MR
0603
R134
0R
0603
Z2
16V_Zener
R136
10MR
0603
Z3
16V_Zener
R137
10kR
0603
2N7002KW
Q4
CR1
1N4148W-7-F
Diode 100 V 300mA
PGND
R131
5.1kR
1206
R132
5.1kR
1206
R133
7.5kR_0603
0603
D27
100V
DSGD
PACKD
R138
5.1kR
1206
R140
5.1kR
1206
LDD
R139
5.1kR
1206
R141
5.1kR
1206
C178
0.1uF 100V
0603
coupling2
C179
0.1uF 100V
0603
PACK+
J25
XT60-M
PGND

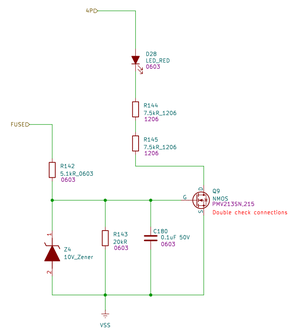
4PD
D28
LED_RED
0603
R144
7.5kR_1206
1206
R145
7.5kR_1206
1206
FUSED
R142
5.1kR_0603
0603
Q9
NMOS
PMV213SN,215
Double check connections
Z4
10V_Zener
R143
20kR
0603
C180
0.1uF 50V
0603
VSS