Feature Description (continued)

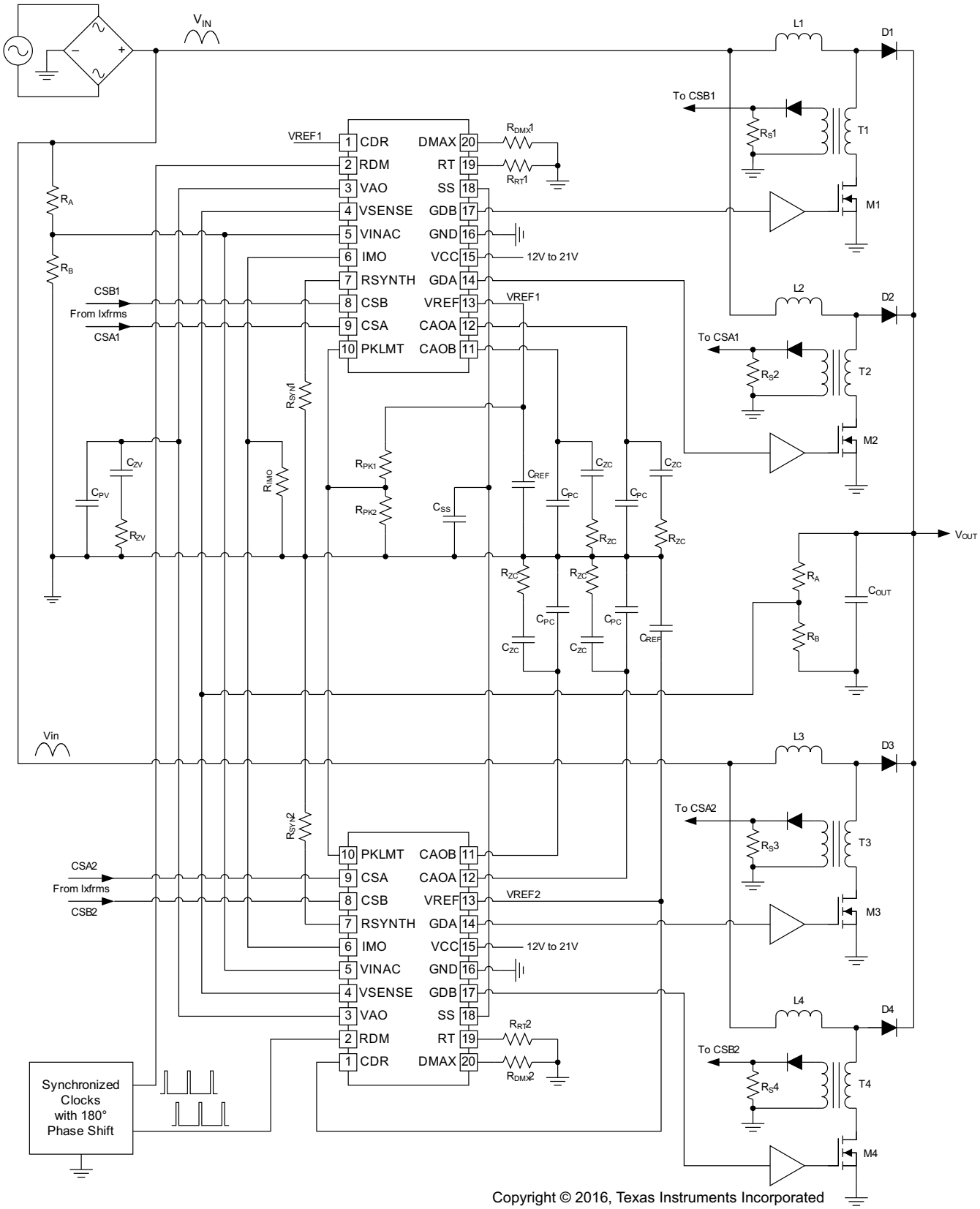

Copyright © 2016, Texas Instruments Incorporated

Figure 18. Simplified Four-Phase Application Diagram Using Two UCC28070 Devices

Copyright © 2007–2016, Texas Instruments Incorporated