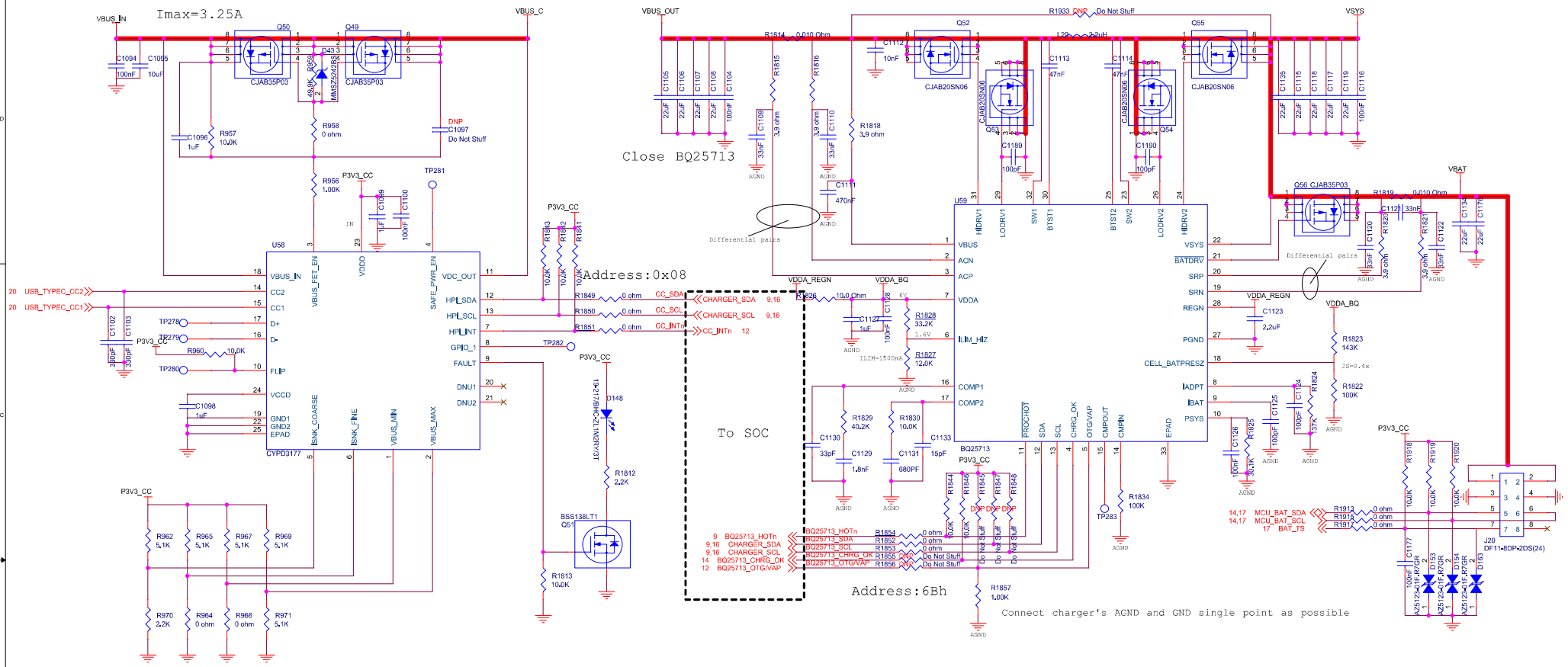

ISINK=2A+0mA

Vmin=5V

Vmax=15V

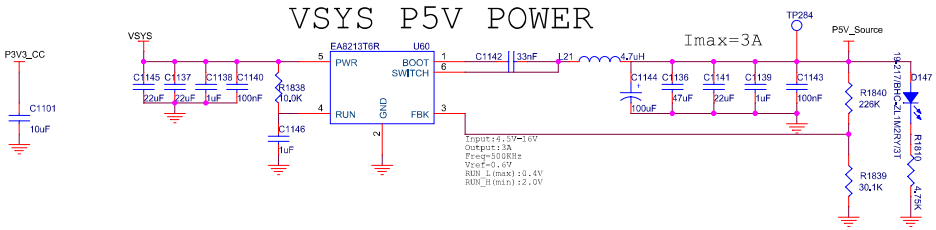

J Y 电池

标称电 压 ： 7.6V
充电限制 电 压 ： 8.7V
标称容量 ： 6000mAh(0.2C)
通讯 ： I2C,400K Hz
Cell:KPL765984-3.8V-6000mAh

TS:SNS103B23435FE1Z040EHD15

00度 27.9650 K Om
10度 18.1667 K Om
25度 10.0000 K Om
45度 4.88790 K Om
50度 4.13860 K Om
60度 3.00720 K Om

Table 2. Resistor Divider Values for Minimum or Maximum Voltage Requested on VBUS

Voltage Requested (V)	Resistor Ratio Relative to VDDD = 3.3 V	Suggested Pull-up Resistor value (kΩ)	Suggested Pull-down Resistor value (kΩ)	Voltage Range on Pin (mV)
5	0/6	Open	0	0–248
9	1/6	5.1	1	249–786
12	2/6	5.1	2.4	787–1347
15	3/6	5.1	5.1	1348–1920
19	4/6	5.1	10	1921–2778
20	≥ 5/6	0	Open	≥ 2779

Table 3. Resistor Divider Values for Coarse Setting on Operating Current (For VDDD = 3.3 V)

Operating Current Requested for Coarse Setting (A)	Resistor Ratio Relative to VDDD = 3.3 V	Suggested Pull-up Resistor value (kΩ)	Suggested Pull-down Resistor value (kΩ)	Voltage Range on Pin (mV)
0	0/6	Open	0	0–248
1	1/6	5.1	1	249–786
2	2/6	5.1	2.4	787–1347
3	3/6	5.1	5.1	1348–1920
4	4/6	5.1	10	1921–2778
5	≥ 5/6	0	Open	≥ 2779

Table 4. Resistor Divider Values for Fine Setting on Operating Current (For VDDD = 3.3 V)

Operating Current Requested for Fine Setting (A)	Resistor Ratio Relative to VDDD = 3.3 V	Suggested Pull-up Resistor Value (kΩ)	Suggested Pull-down Resistor Value (kΩ)	Voltage Range on Pin (mV)
+0	0/6	Open	0	0–248
+250	1/6	5.1	1	249–786
+500	2/6	5.1	2.4	787–1347
+750	3/6	5.1	5.1	1348–1920
+900	≥ 4/6	0	Open	≥ 1921

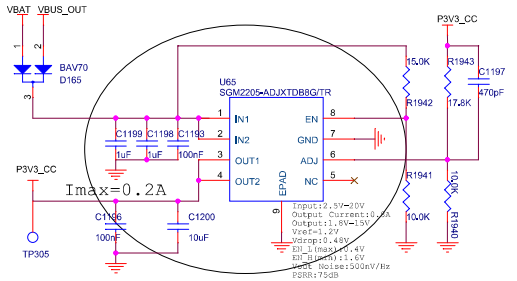

P3V3_Charger

ANALOG INPUT (CELL_BATPRESZ)					
V_{CELL_4S}	4S	REGN of REGN = 6 V, as percentage	0.684	0.75	
V_{CELL_3S}	3S	REGN of REGN = 6 V, as percentage	0.517	0.55	0.65
V_{CELL_2S}	2S	REGN of REGN = 6 V, as percentage	0.35	0.4	0.491
V_{CELL_1S}	1S	REGN of REGN = 6 V, as percentage	0.184	0.25	0.316

PARAMETER		TEST CONDITIONS	MIN	TYP	MAX	UNIT
$I_{OPM_REG_ACC_ILIM}$	Input Current Regulation Accuracy on ILIM_HIZ pin $V_{ILIM_HIZ} = 1 V + 40 \times I_{OPM} \times R_{AC}$, with 10-mΩ ACP/ACN series resistor	V_{ILIM_HIZ} = 2.6 V	3800	4000	4200	mA
		V_{ILIM_HIZ} = 2.2 V	2800	3000	3200	mA
		V_{ILIM_HIZ} = 1.6 V	1300	1500	1700	mA
		V_{ILIM_HIZ} = 1.2 V	300	500	700	mA

BOM TP10 MAIN BOARD V10

Title	TP10	
Size C	Document Number CC Charger	Rev V10
Date: Thursday, January 21, 2021	Sheet 16 of 21	