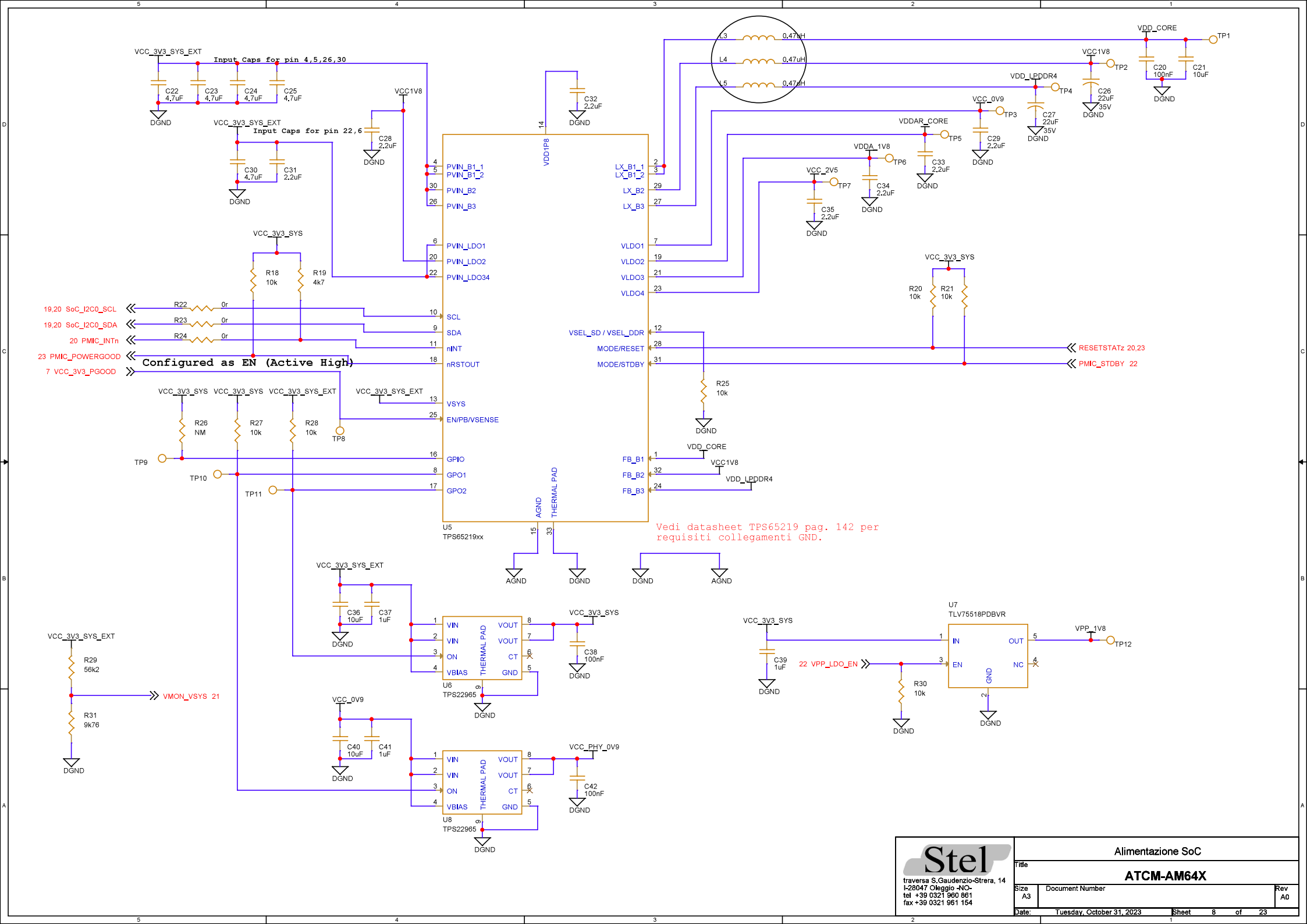

Stel
traversa S.Gaudenzio-Strera, 14
I-28047 Oleggio -NO-
tel +39 0321 960 861
fax +39 0321 961 154

Alimentazione SoC

Title
ATCM-AM64X

Size	Document Number	Rev
A3		A0

Date: Tuesday, October 31, 2023 Sheet 8 of 23