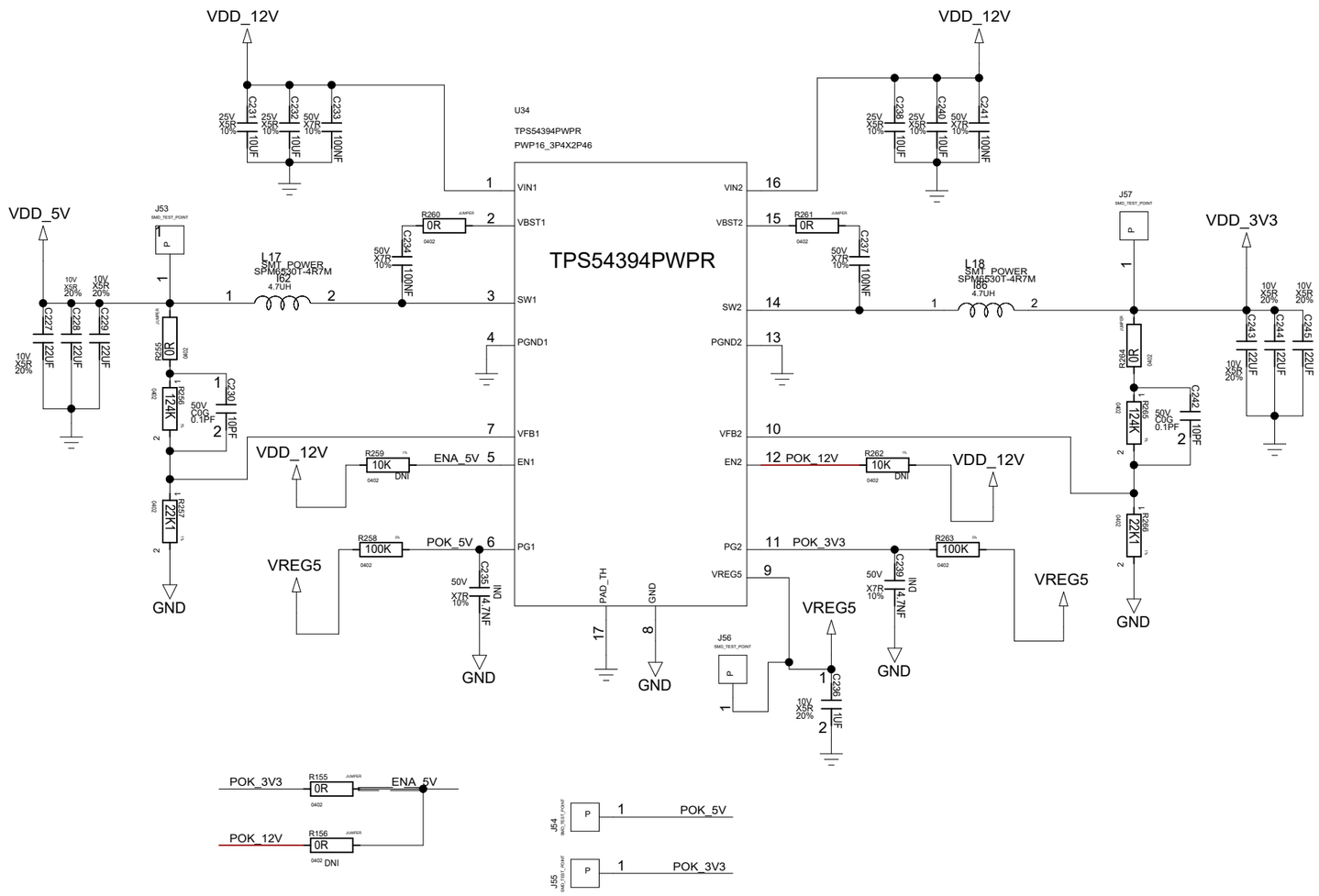
U34
TPS54394PWPR
PWP16_3P4X2P46
TPS54394PWPR
VDD_12V
VDD_5V
VDD_3V3
VREG5
GND
POK_5V
POK_3V3
POK_12V
ENA_5V
L17
SMT_POWER
SPM6530T-4R7M
I62
4.7UH
L18
SMT_POWER
SPM6530T-4R7M
I86
4.7UH
R258
100K
R259
10K
DNI
R262
10K
DNI
R263
100K
R155
0R
R156
0R
DNI
J53
J54
J55
J56
J57