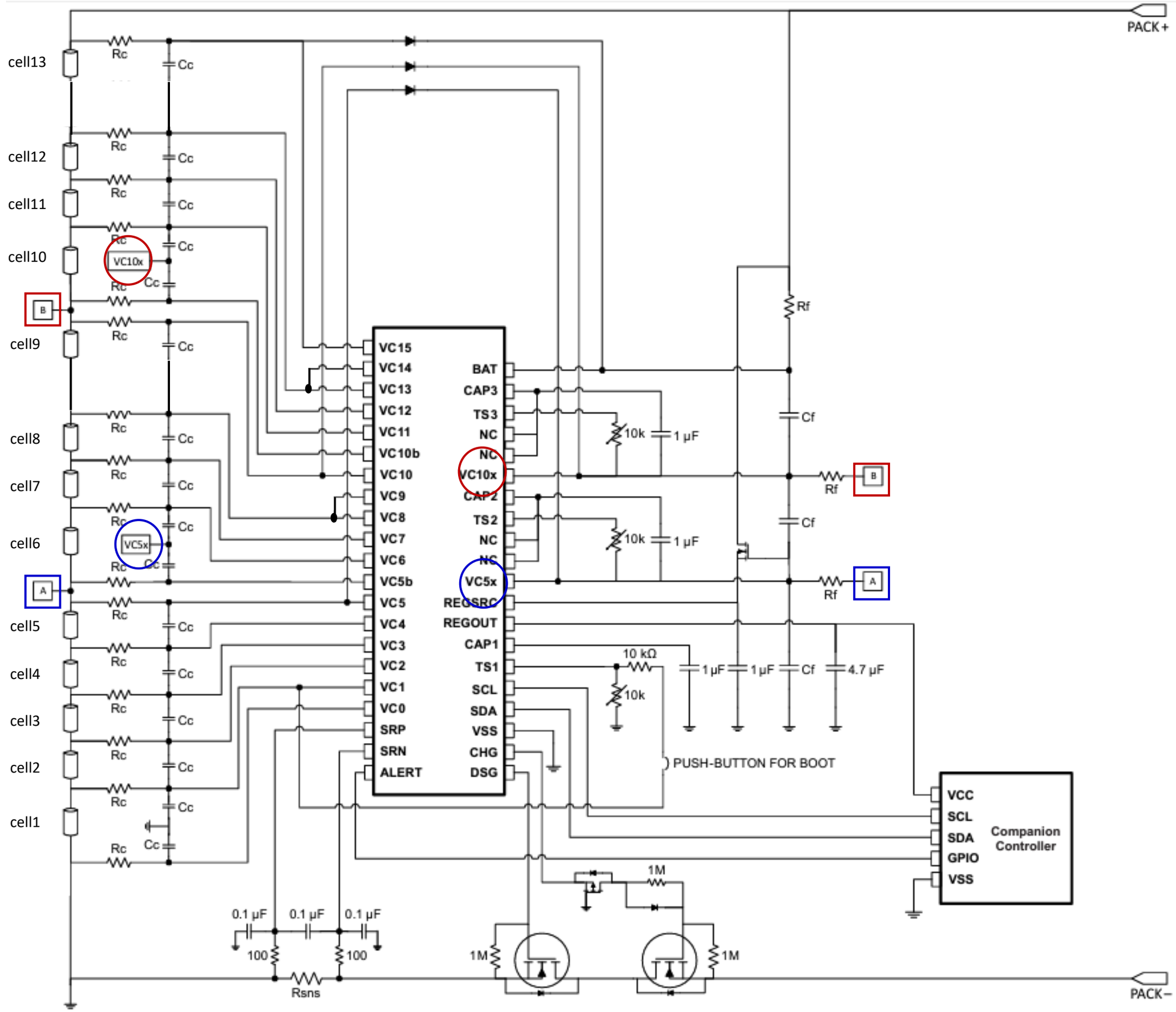
PACK+
cell13
cell12
cell11
cell10
cell9
cell8
cell7
cell6
cell5
cell4
cell3
cell2
cell1
Rc
Cc
VC10x
VC5x
B
A
VC15
VC14
VC13
VC12
VC11
VC10b
VC10
VC9
VC8
VC7
VC6
VC5b
VC5
VC4
VC3
VC2
VC1
VC0
SRP
SRN
ALERT
BAT
CAP3
TS3
NC
VC10x
CAP2
TS2
VC5x
REGSRC
REGOUT
CAP1
TS1
SCL
SDA
VSS
CHG
DSG
10k
1 µF
Rf
Cf
10 kΩ
4.7 µF
PUSH-BUTTON FOR BOOT
VCC
GPIO
Companion Controller
1M
0.1 µF
100
Rsns
PACK−