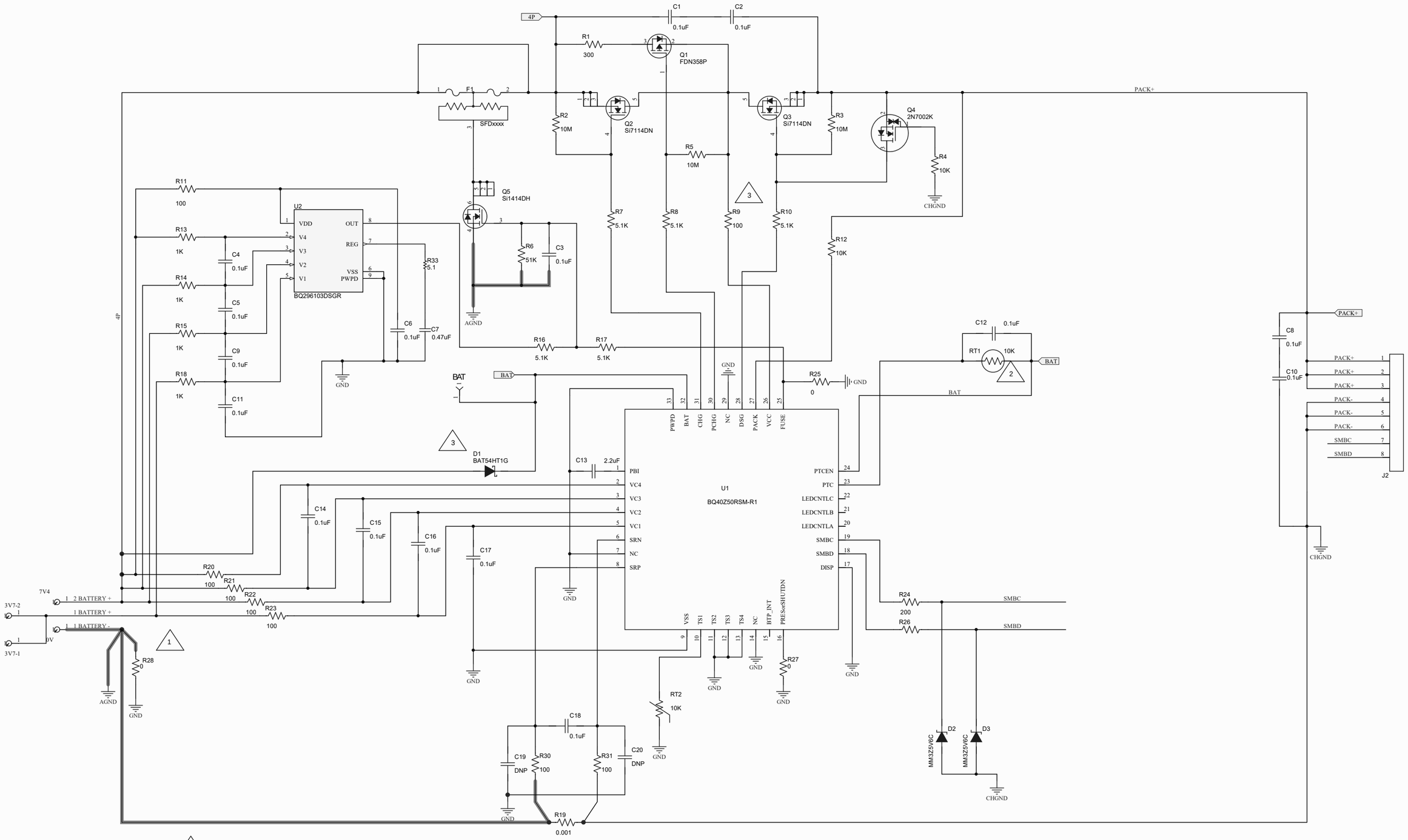

1. IC ground should be connected to the 1N cell tab.
2. Place RT1 close to Q2 and Q3.
3. Replace D1 and R9 with a 10 ohm resistor for single cell applications

Title		
Size A2	Number	Revision
Date: 2018/12/26		Sheet of
File: E:\AN Handheld devices Imx6\..\GAUGE.PROJ\GT.SchDoc		Drawn by: