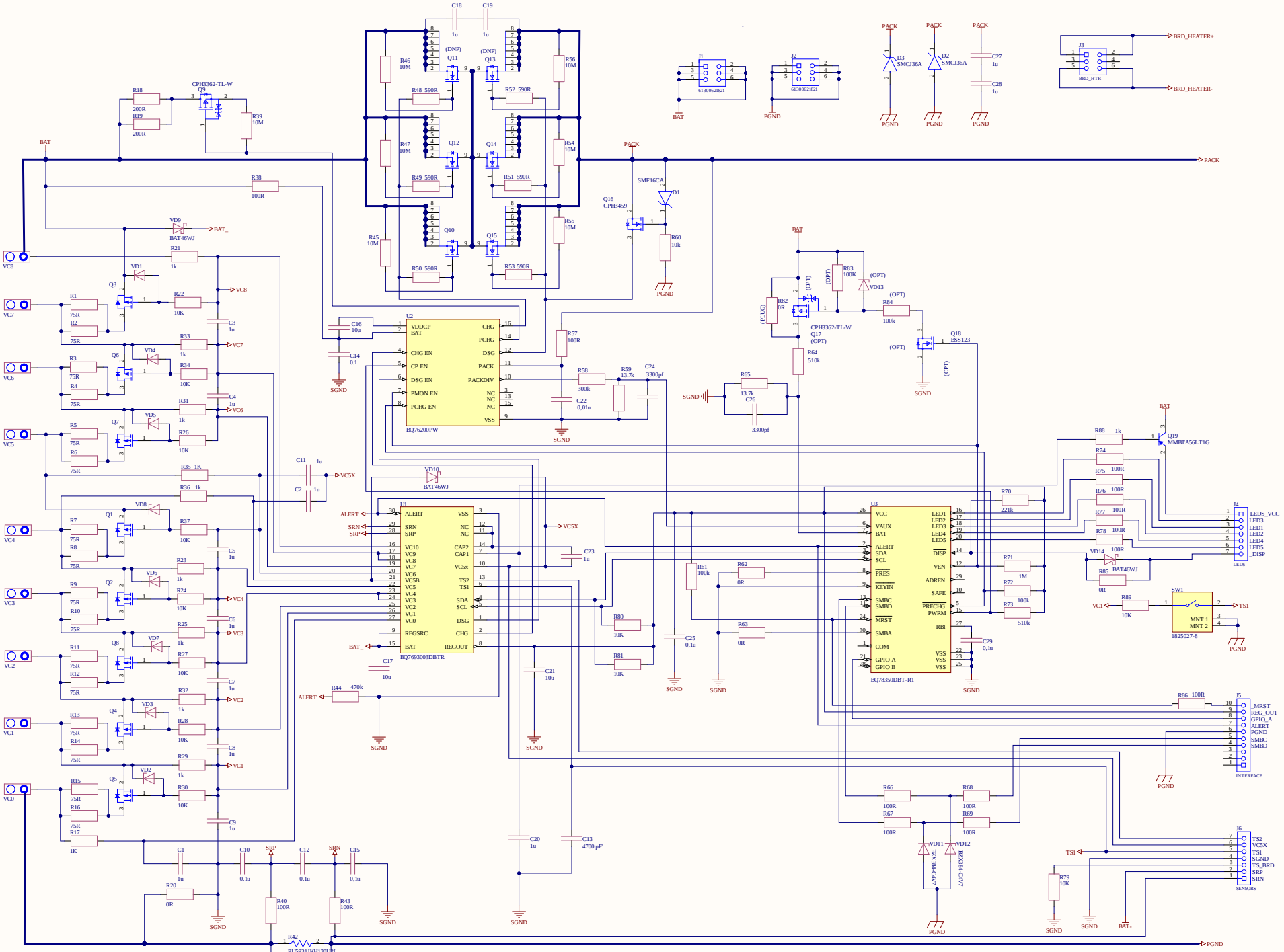
U2
BQ76200PW
U1
BQ76930DBTR
U3
BQ78350DBT-R1
J1
J2
J3
BRD_HTR
J4
LEDS
J5
INTERFACE
J6
SENSORS
SW1
1825027-8
BRD_HEATER+
BRD_HEATER-
PACK
BAT
PGND
SGND
VC8
VC7
VC6
VC5
VC4
VC3
VC2
VC1
VC0
VC5X
BAT_
BAT-
ALERT
SRN
SRP
TS1
TS2
TS3
MRST
REG_OUT
GPIO_A
SMBC
SMBD
LEDS_VCC
LED3
LED1
LED2
LED4
LED5
DISP
Title *
Size: A2
Number: A6BI_12345678901_a*
Date: 29.06.2022
Time: 16:12:17
Sheet 1 of 3
File: C:\D\Ausrupanc\PCBA\VIATRANS\BQ76930_MCU_8_Cell.SchDoc
Address1
Address2
Address3
Address4
Altium

Board Stack Report