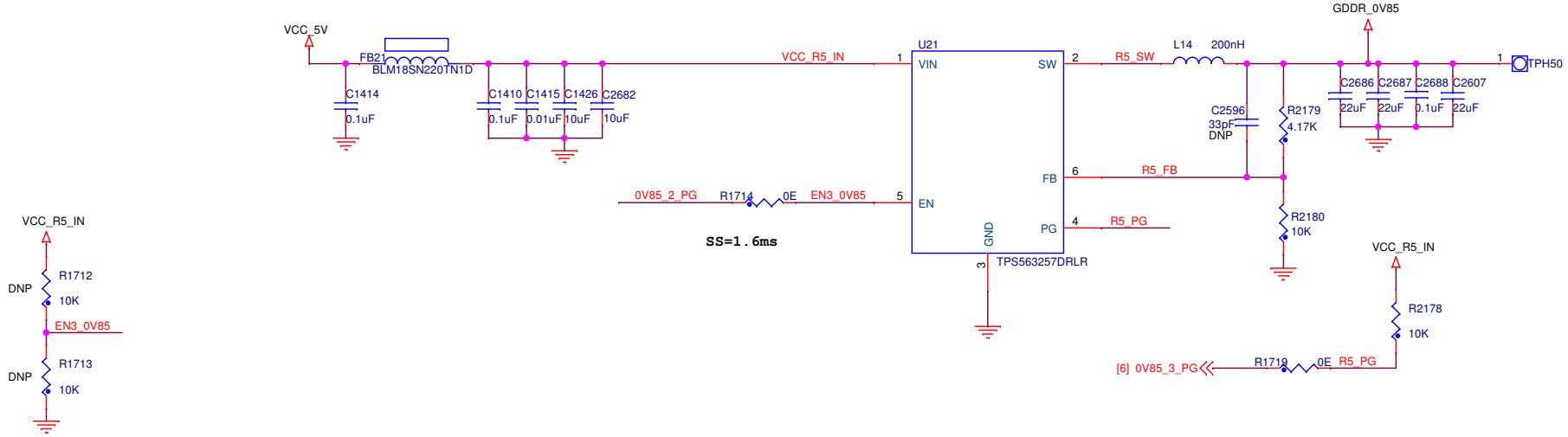5V to 0.85V 3A Regulator