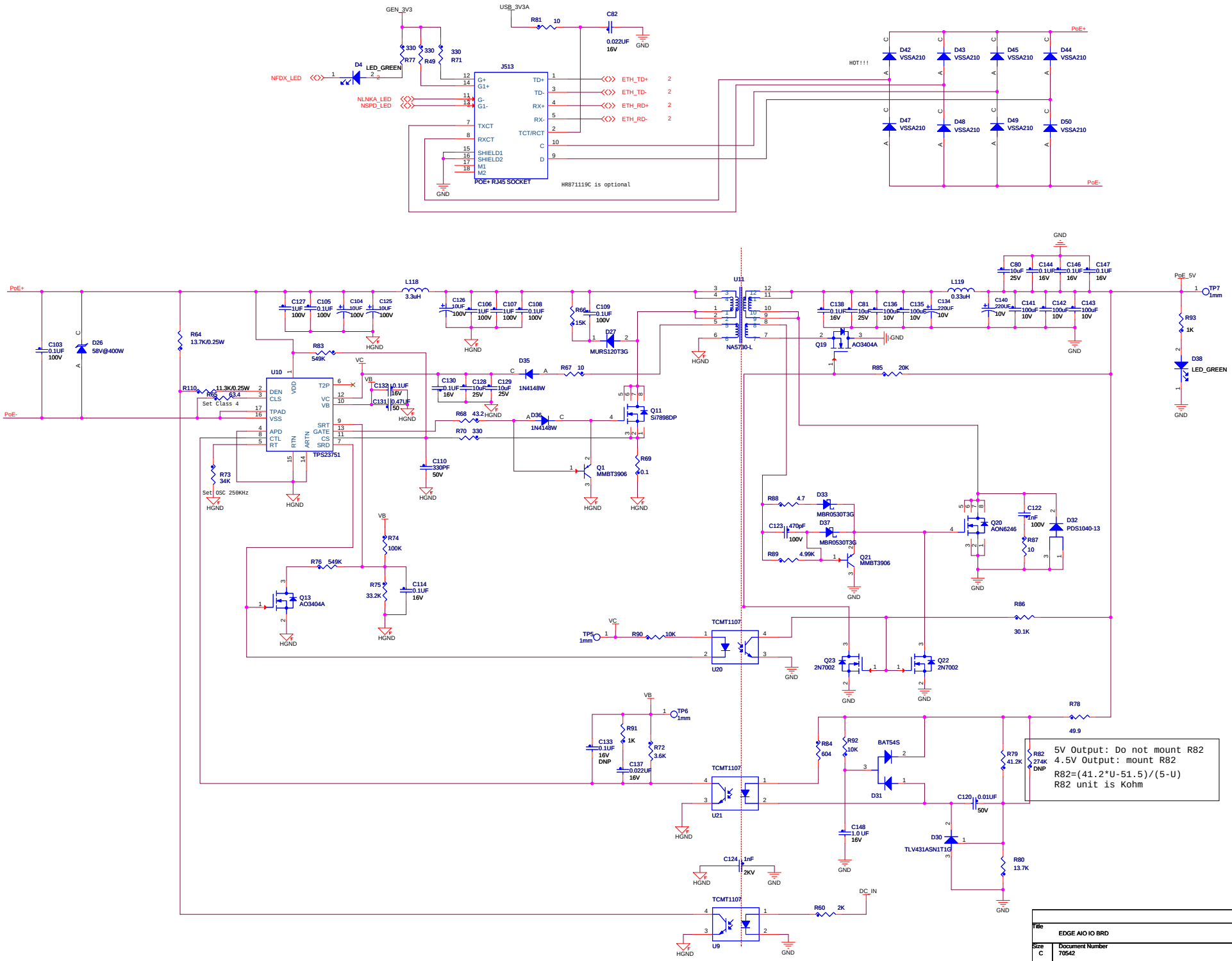
GEN_3V3
USB_3V3A
R81 10
C82 0.022UF 16V
GND
R77 330
R49 330
R71 330
D4 LED_GREEN
NFDX_LED
NLNKA_LED
NSPD_LED
J513
G+
G1+
G-
G1-
TXCT
RXCT
SHIELD1
SHIELD2
M1
M2
TD+
TD-
RX+
RX-
TCT/RCT
C
D
ETH_TD+
ETH_TD-
ETH_RD+
ETH_RD-
POE+ RJ45 SOCKET
HR871119C is optional
HOT!!!
PoE+
PoE-
D42 VSSA210
D43 VSSA210
D45 VSSA210
D44 VSSA210
D47 VSSA210
D48 VSSA210
D49 VSSA210
D50 VSSA210
C103 0.1UF 100V
D26 58V@400W
R64 13.7K/0.25W
C127 1UF 100V
C105 0.1UF 100V
C104 10UF 100V
C125 10UF 100V
L118 3.3uH
C126 10UF 100V
C106 1UF 100V
C107 1UF 100V
C108 0.1UF 100V
R65 15K
C109 0.1UF 100V
D27 MURS120T3G
U11
NA5730-L
C138 0.1UF 16V
C81 10uF 25V
C136 100uF 10V
C135 100uF 10V
C134 220UF 10V
L119 0.33uH
C140 220UF 10V
C141 100uF 10V
C142 100uF 10V
C143 100uF 10V
C80 10uF 25V
C144 0.1UF 16V
C146 0.1UF 16V
C147 0.1UF 16V
PoE_5V
TP7 1mm
R93 1K
D38 LED_GREEN
Q19 AO3404A
R85 20K
R83 549K
VC
VB
U10
TPS23751
DEN
CLS
TPAD
VSS
APD
CTL
RT
VDD
T2P
VC
VB
SRT
GATE
CS
SRD
RTN
ARTN
R110 11.3K/0.25W
R66 83.4
Set Class 4
C132 0.1UF 16V
C131 0.47UF 50
C130 0.1UF 16V
C128 10uF 25V
C129 10uF 25V
D35 1N4148W
R67 10
R68 43.2
R70 330
D36 1N4148W
Q11 Si7898DP
C110 330PF 50V
Q1 MMBT3906
R69 0.1
R73 34K
Set OSC 250KHz
HGND
R74 100K
R76 549K
R75 33.2K
C114 0.1UF 16V
Q13 AO3404A
R88 4.7
D33 MBR0530T3G
C123 470pF 100V
D37 MBR0530T3G
R89 4.99K
Q21 MMBT3906
Q20 AON6246
C122 1nF 100V
D32 PDS1040-13
R87 10
R86 30.1K
TP5 1mm
R90 10K
TCMT1107
U20
Q23 2N7002
Q22 2N7002
TP6 1mm
R91 1K
R72 3.6K
C133 0.1UF 16V DNP
C137 0.022UF 16V
U21
R84 604
R92 10K
BAT54S
D31
R79 41.2K
R82 274K DNP
R78 49.9
C120 0.01UF 50V
D30 TLV431ASN1T1G
C148 1.0 UF 16V
R80 13.7K
C124 1nF 2KV
DC_IN
R60 2K
U9
5V Output: Do not mount R82
4.5V Output: mount R82
R82=(41.2*U-51.5)/(5-U)
R82 unit is Kohm
Title
EDGE AIO IO BRD
Size C
Document Number 70542
Rev 3.0
Date: Saturday, May 09, 2015
Sheet 3 of 3