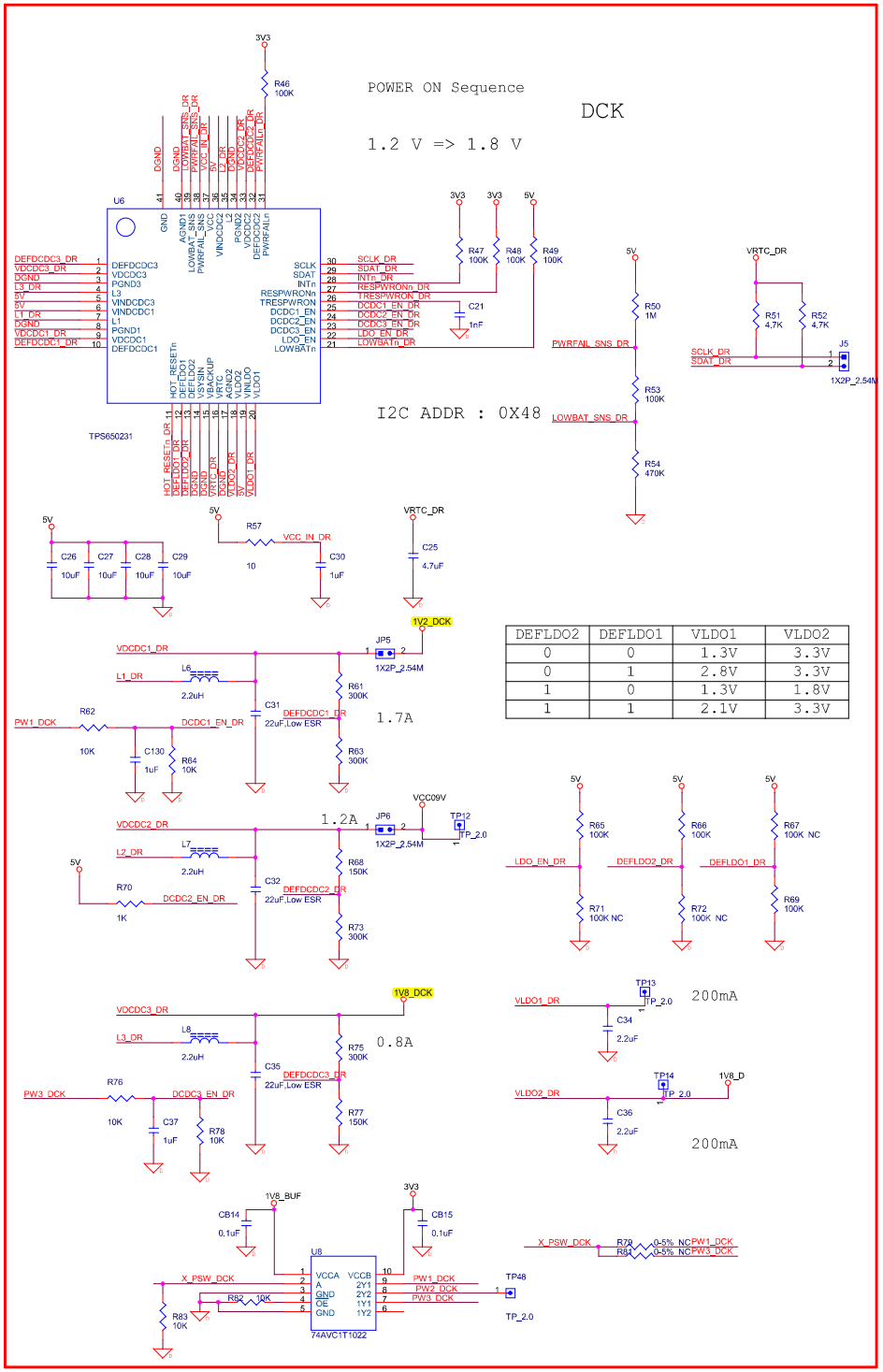

DEFLDO2	DEFLDO1	VLDO1	VLDO2
0	0	1.3V	3.3V
0	1	2.8V	3.3V
1	0	1.3V	1.8V
1	1	2.1V	3.3V

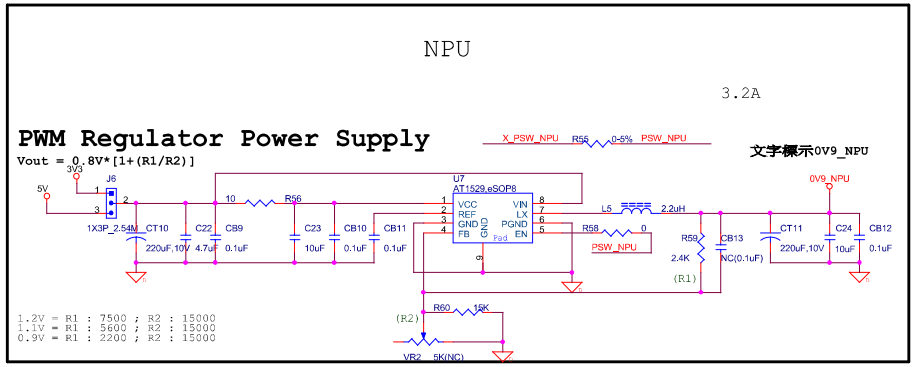

X_PSW_DCK — X_PSW_DCK 5

X_PSW_NPU — X_PSW_NPU 5

HOT_RESETn_DR — HOT_RESETn_DR 2