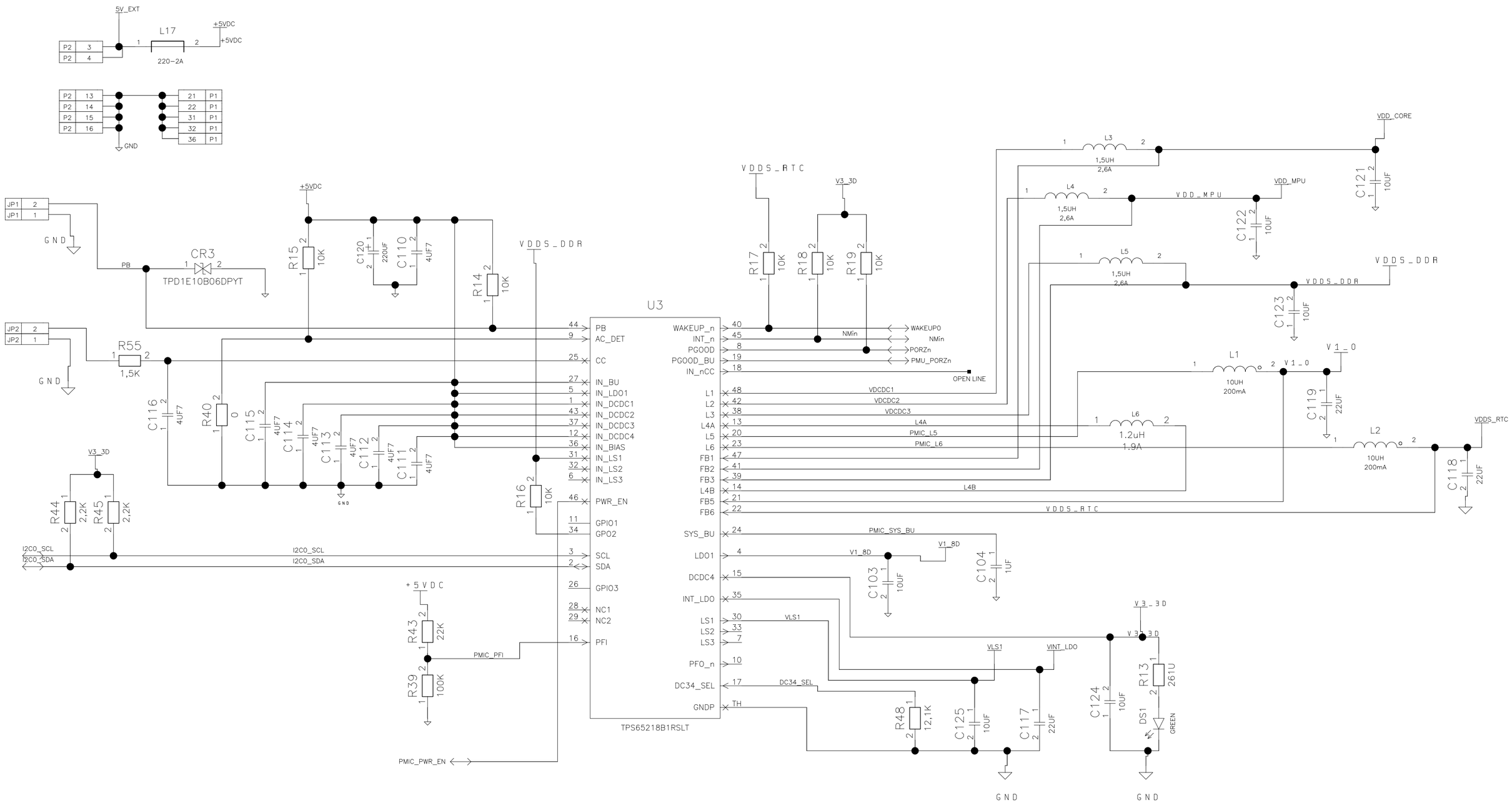

Mentor Graphics®

TITLE

Schematic

SIZE	DWG NO	REV
A2		0

DRAWN BY <YOUR NAME HERE>

SCALE

SHEET 2 of 6

20/03/2018:19:33