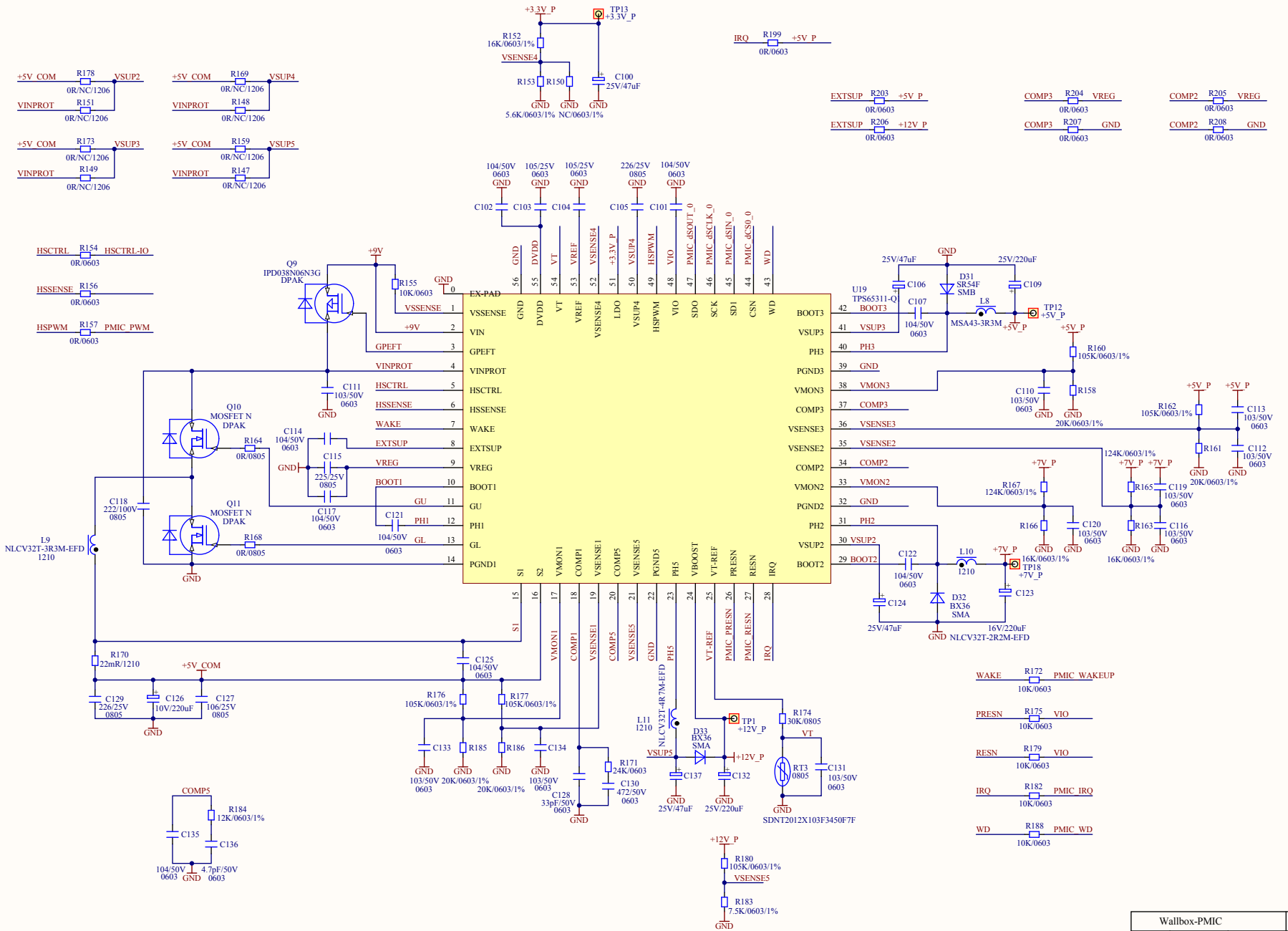

Wallbox-PMIC			V1.0		6/8
		2019-09-23			

Condition	Description	Subjectivity	Frequency	Lot Size	Quantity
Ultra-Thin		Ultra-Thin	Ultra-Thin	Ultra-Thin	