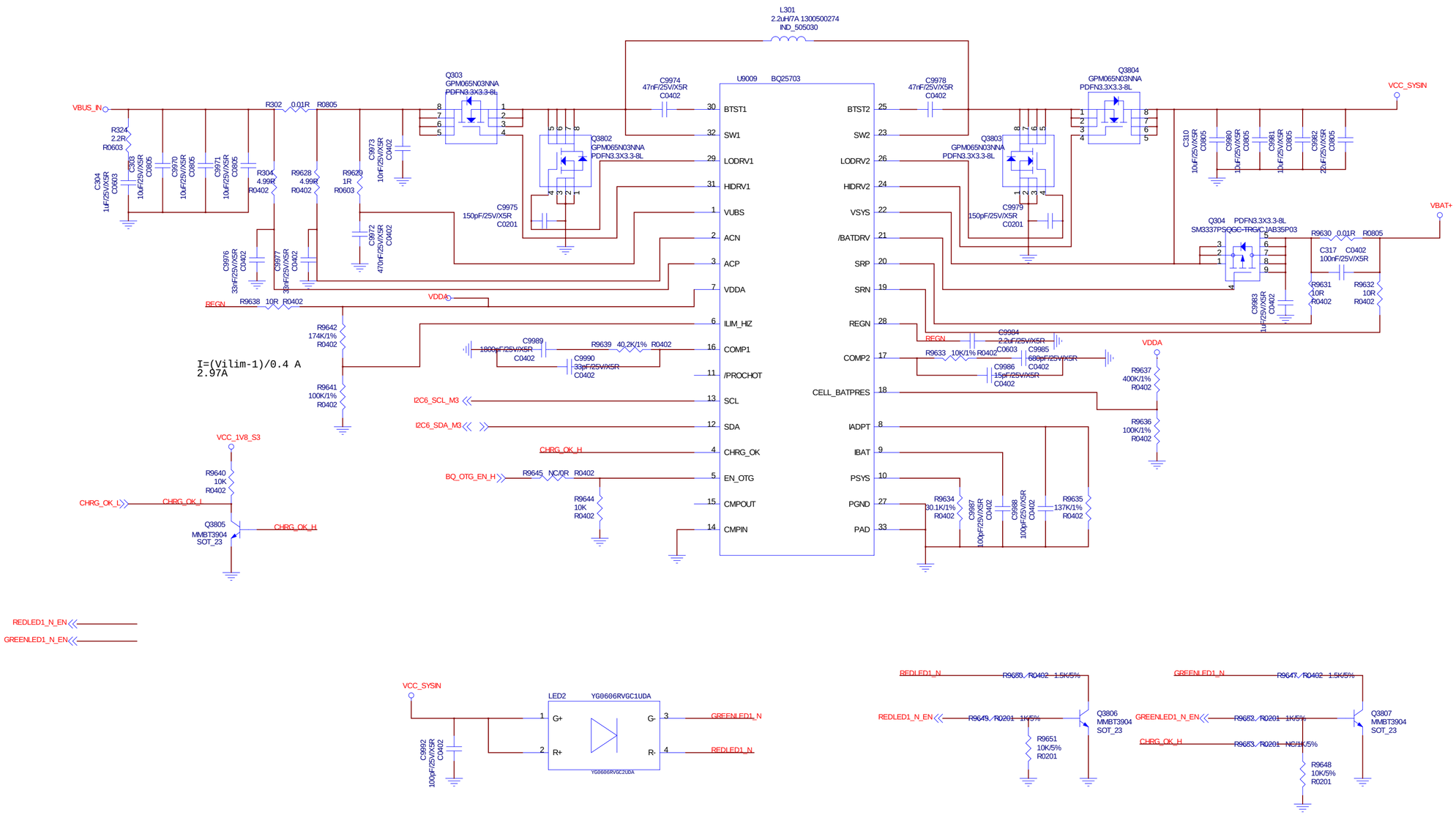

Title			
Size C	Document Number		Rev ?
Date: Tuesday, August 06, 2024	Sheet 1 of 1		