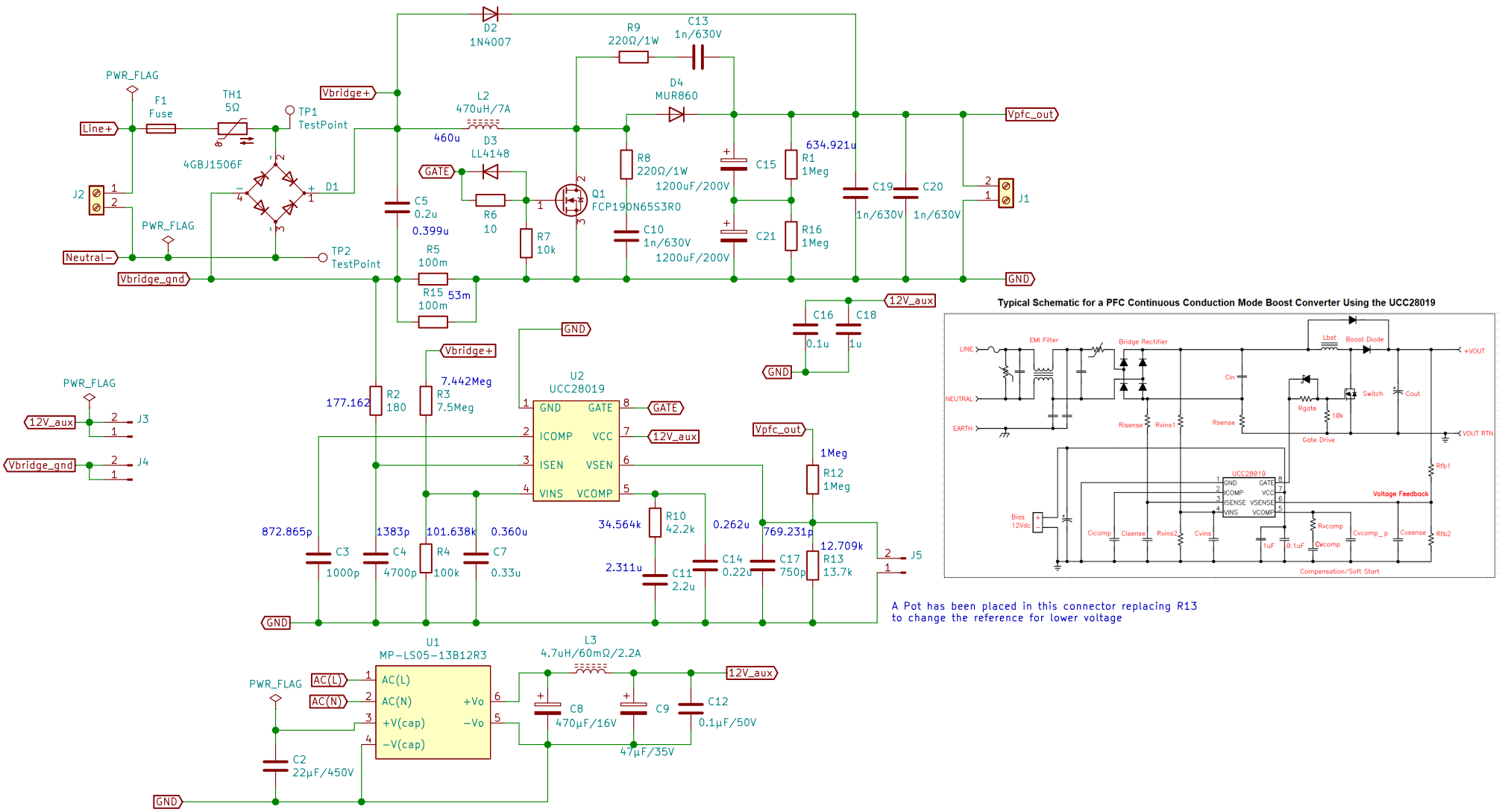

A Pot has been placed in this connector replacing R13 to change the reference for lower voltage

Typical Schematic for a PFC Continuous Conduction Mode Boost Converter Using the UCC28019

Sheet: /
File: PFC_UCC28019.sch

Title:

Size: A4	Date:	Rev:
KiCad E.D.A. kicad (5.1.8)−1		Id: 1/1