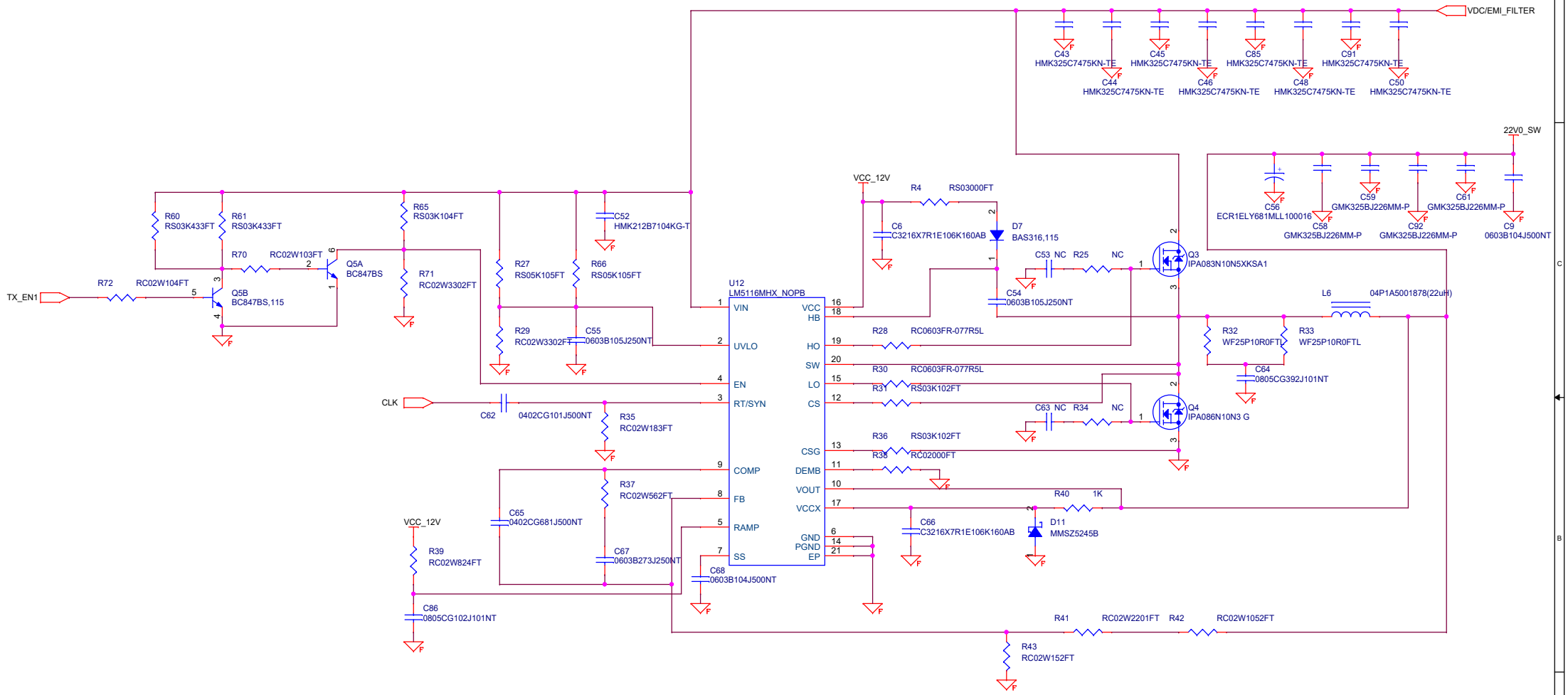

Title	200W PSU	
Size A3	Document Number <Doc>	Rev A
Date: Thursday, October 05, 2023	Sheet 4 of 5	