8 Design Files

8.1 Schematics

To download the schematics, see the design files at TIDA-00488.

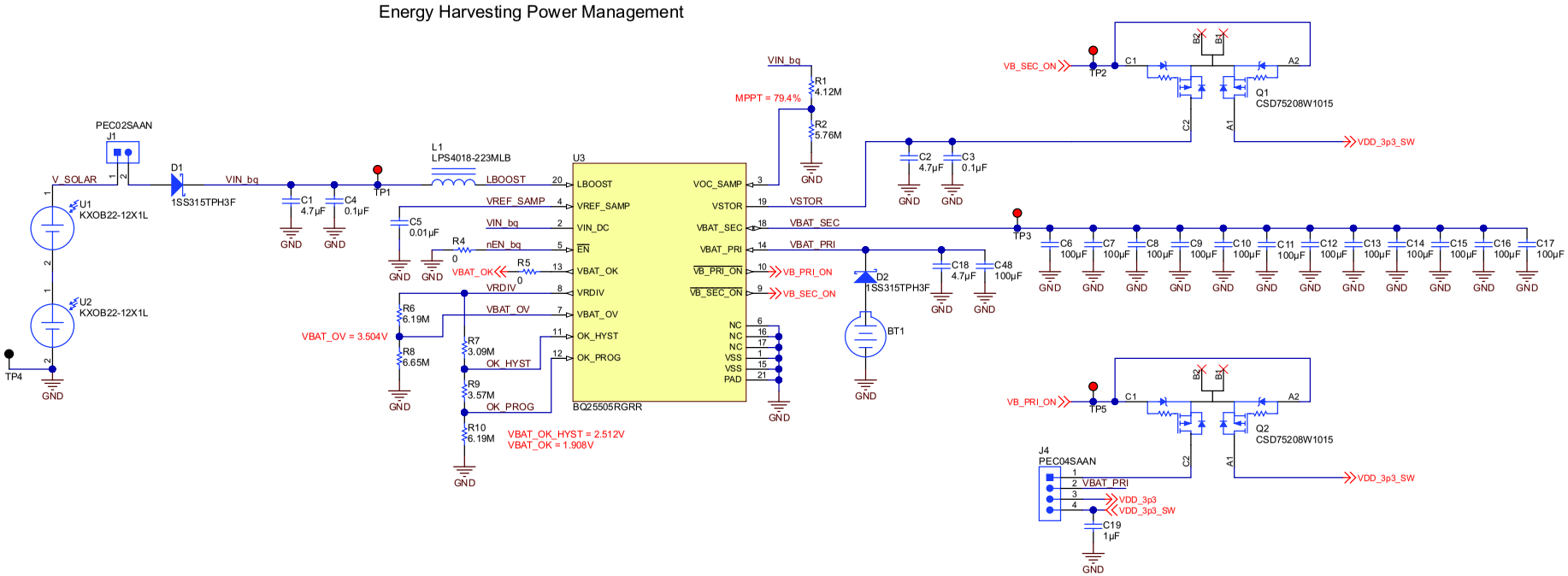

Figure 32. Energy Harvesting Schematic

Copyright © 2015–2016, Texas Instruments Incorporated