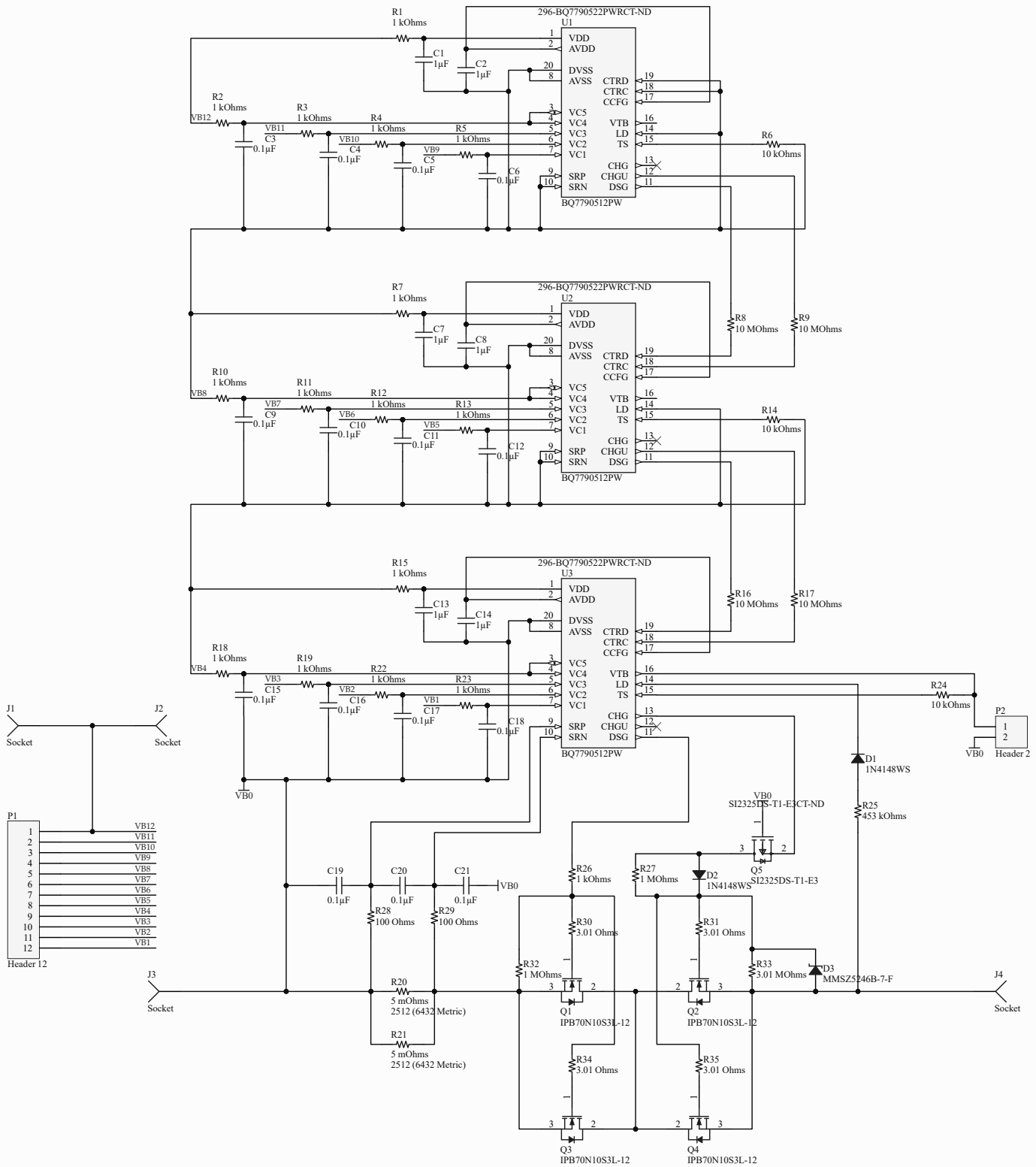

Title:			Cannot open file logo.png. File does not exist.
Page Contents: PCM_12S_BQ77905.SchDoc			
Drawn By: *	Checked By: *		
Size: A4	Number: *	Revision:	
Date: 21/03/2022	Time: 1:15:46 PM	Sheet 1 of	
License:			
Email: #NAME?		Website:	
File: C:\git\electronics\PCM_12S\hardware\PCM_12S_BQ77905\PCM_12S_BQ77905.SchDoc			