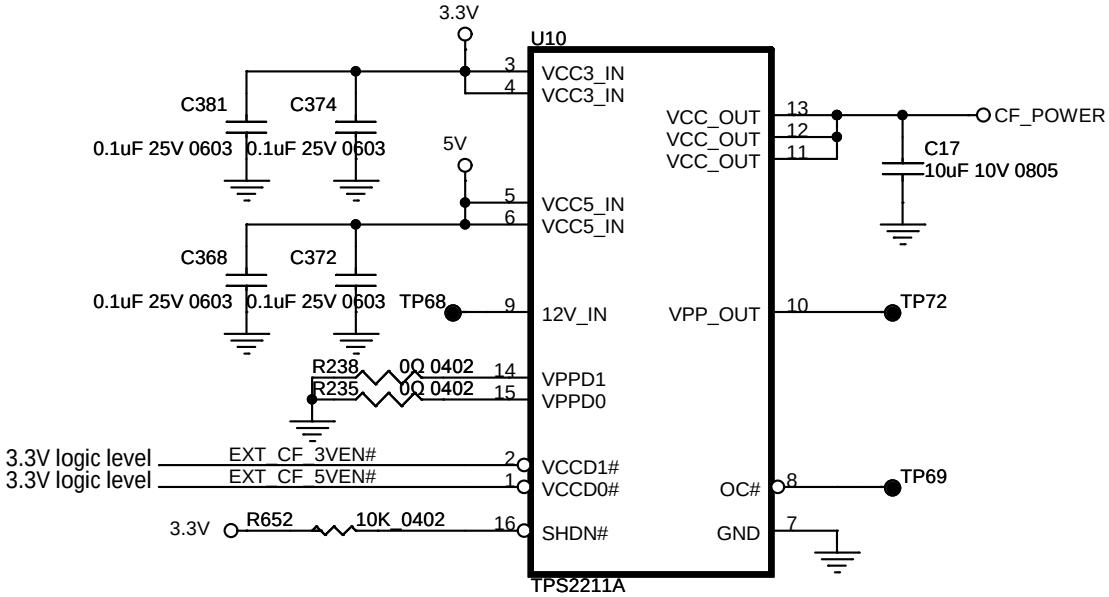
3.3V
U10
3
4
VCC3_IN
VCC3_IN
C381
C374
0.1uF 25V 0603
0.1uF 25V 0603
5V
5
6
VCC5_IN
VCC5_IN
C368
C372
0.1uF 25V 0603
0.1uF 25V 0603
TP68
9
12V_IN
R238
0Ω 0402
14
VPPD1
R235
0Ω 0402
15
VPPD0
3.3V logic level
EXT_CF_3VEN#
2
VCCD1#
3.3V logic level
EXT_CF_5VEN#
1
VCCD0#
3.3V
R652
10K_0402
16
SHDN#
VCC_OUT
VCC_OUT
VCC_OUT
13
12
11
CF_POWER
C17
10uF 10V 0805
VPP_OUT
10
TP72
OC#
8
TP69
GND
7
TPS2211A