5V to 0.85V 40A Stacked Regulator-1

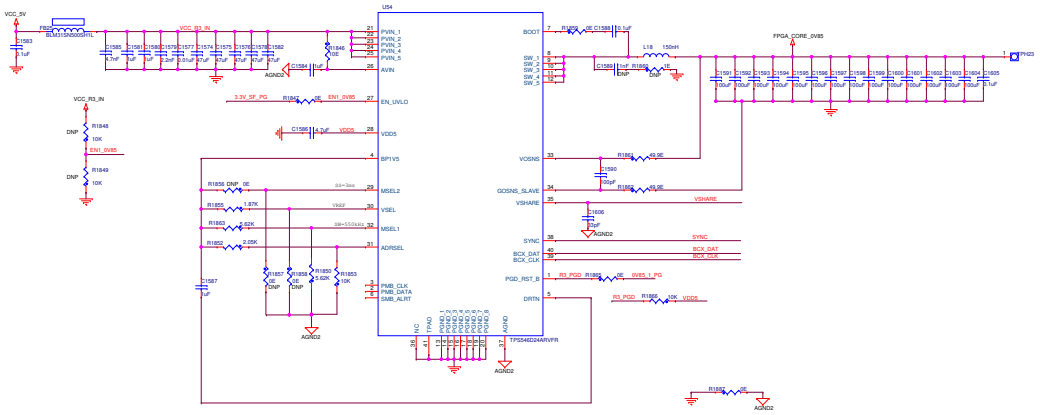

5V to 0.85V 40A Stacked Regulator-2

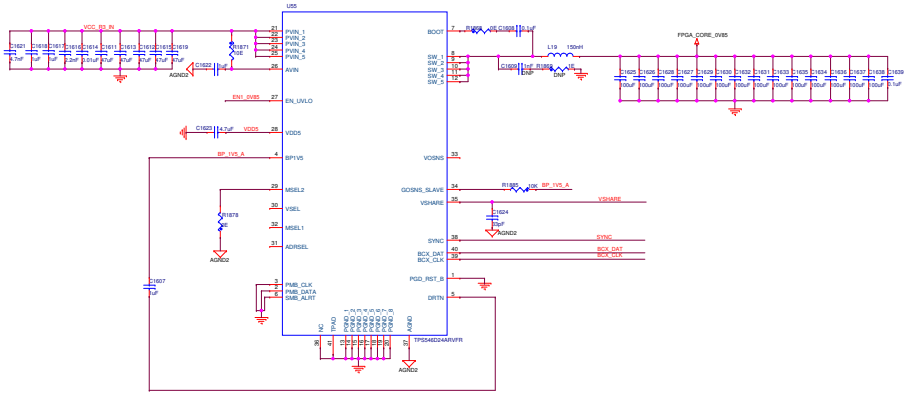

5V to 0.85V 40A Stacked Regulator-3

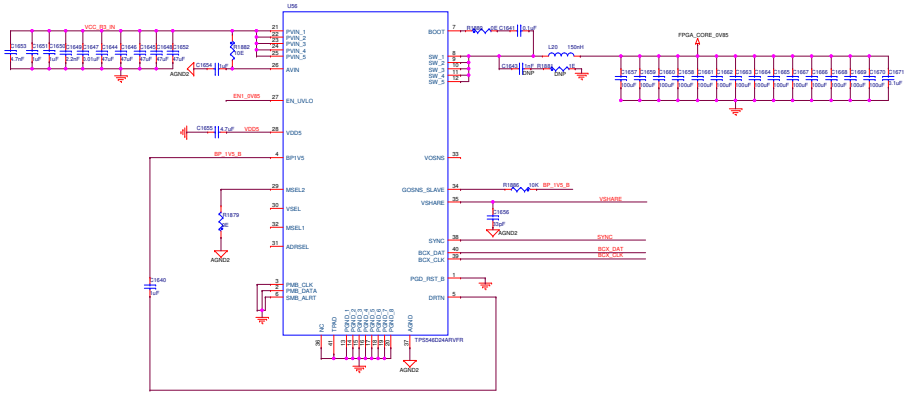

Title	<Title>		
Size	Document Number		Rev
Custom	<Doc>		<Rev Code>
Date:	Saturday, June 17, 2023	Sheet 1 of 1	