TYPE-C Redriver IC

Add TYPE-C Redriver IC Solution @230509

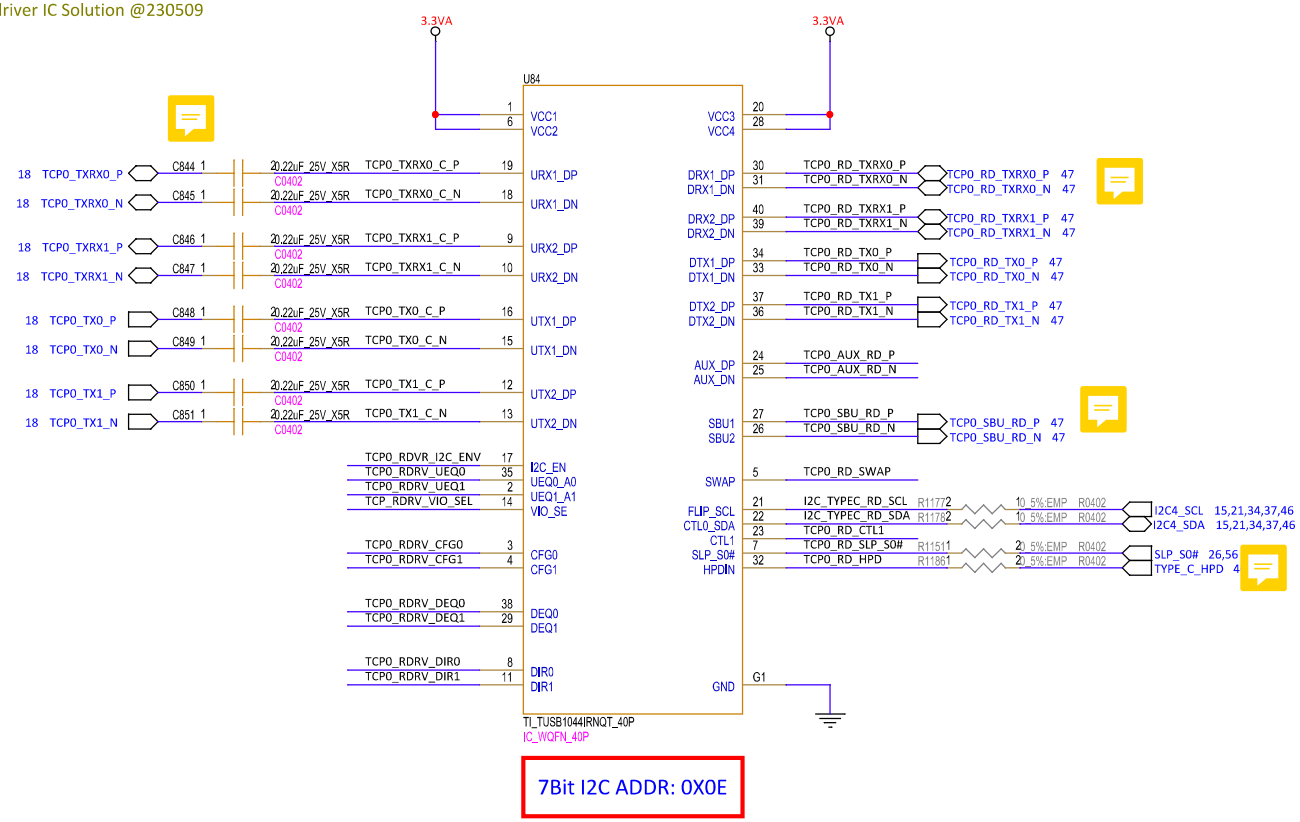
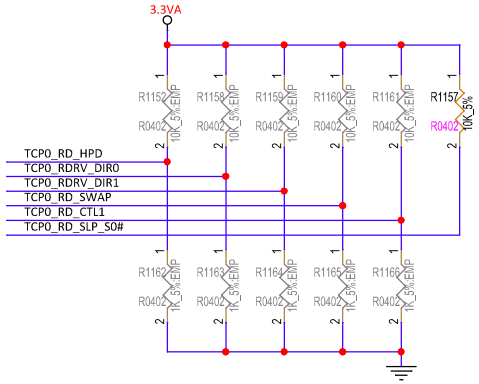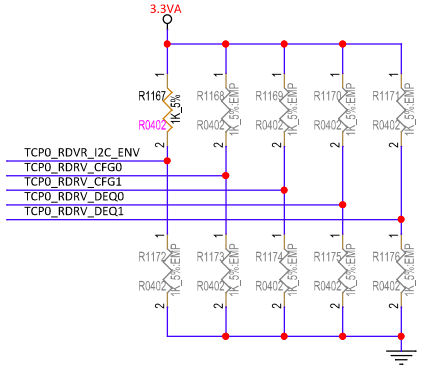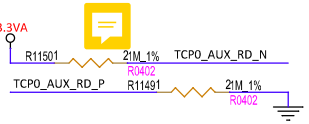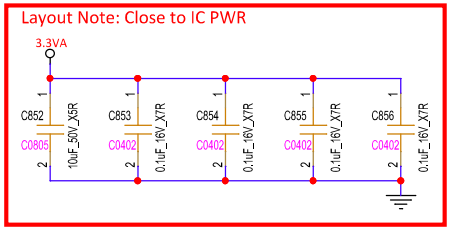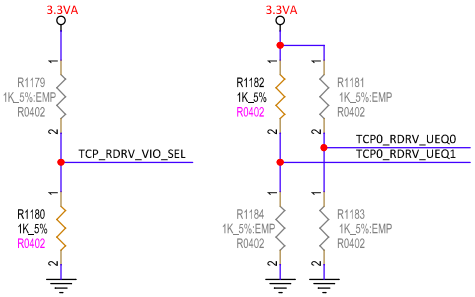
7Bit I2C ADDR: 0X0E