Pins	Description
1	SYNC
2	CS
3	OUTA
4	OUTD
5	OUTB
6	OUTC
8	OUTF
9	VBIAS
10	OUTE
7, 11, 12	GND
13, 14	VOUT

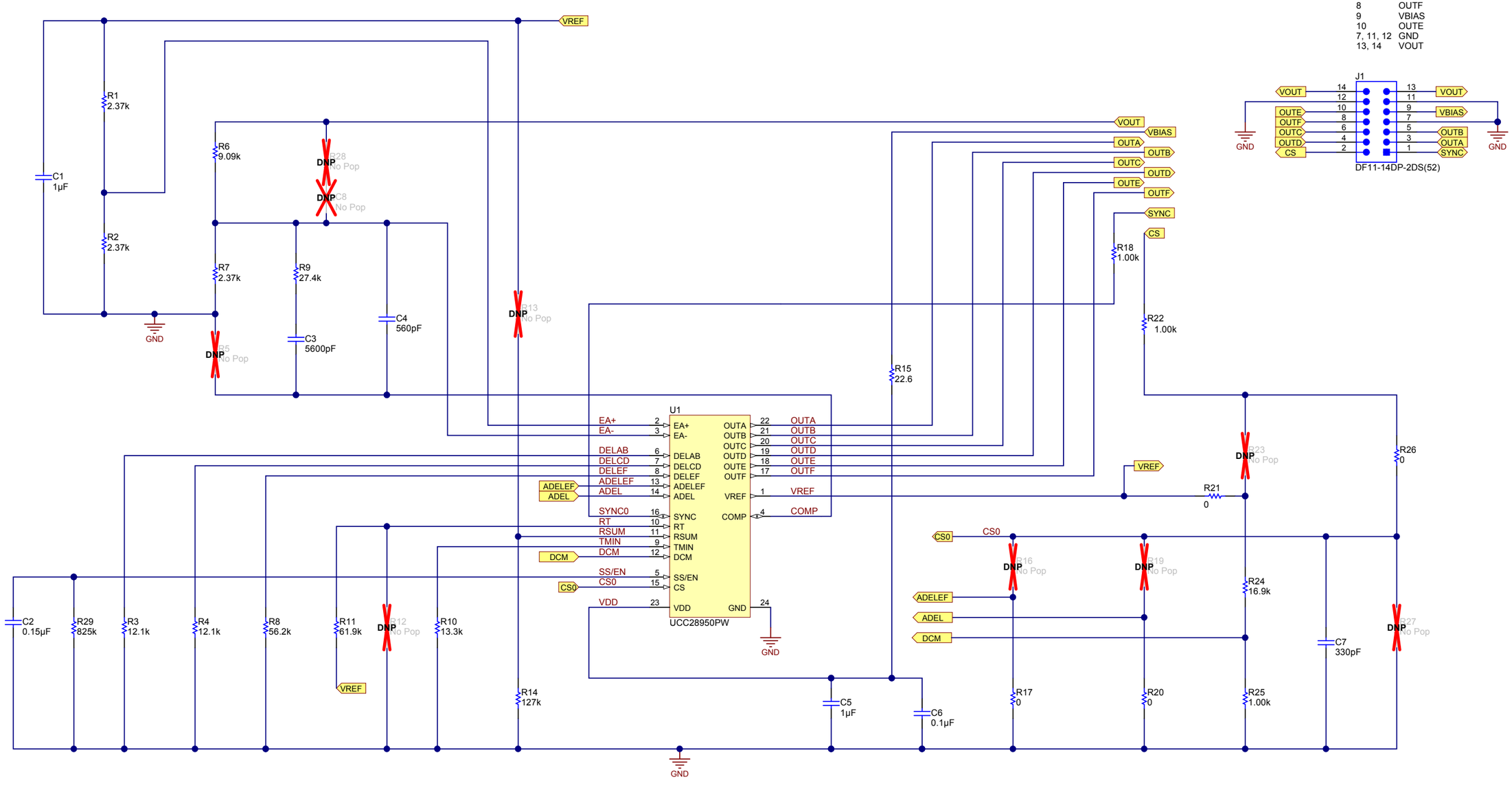

Texas Instruments and/or its licensors do not warrant the accuracy or completeness of this specification or any information contained therein. Texas Instruments and/or its licensors do not warrant that this design will meet the specifications, will be suitable for your application or fit for any particular purpose, or will operate in an implementation. Texas Instruments and/or its licensors do not warrant that the design is production worthy. You should completely validate and test your design implementation to confirm the system functionality for your application.

Number: HPA471	Rev: B	Designed for: EVM	Mod. Date: 10/8/2014
SVN Rev: 1096		Project Title: UCC28950EVM-471	
Drawn By: *		Sheet Title:	
Engineer: Michael O'Loughlin		Assembly Variant: 001	Sheet: 1 of 2
		File: HPA471B_Sht01.SchDoc	Size: B
		Contact:	

Texas Instruments
http://www.ti.com

© Texas Instruments 2014

DNP FID1 DNP FID2 DNP FID3

PCB Number: HPA471
PCB Rev: B

PCB LOGO
Texas Instruments

PCB LOGO
Pb-Free Symbol

ZZ1
Assembly Note
These assemblies are ESD sensitive, ESD precautions shall be observed.

ZZ2
Assembly Note
These assemblies must be clean and free from flux and all contaminants. Use of no clean flux is not acceptable.

ZZ3
Assembly Note
These assemblies must comply with workmanship standards IPC-A-610 Class 2, unless otherwise specified.

Texas Instruments and/or its licensors do not warrant the accuracy or completeness of this specification or any information contained therein. Texas Instruments and/or its licensors do not warrant that this design will meet the specifications, will be suitable for your application or fit for any particular purpose, or will operate in an implementation. Texas Instruments and/or its licensors do not warrant that the design is production worthy. You should completely validate and test your design implementation to confirm the system functionality for your application.

Number: HPA471	Rev: B	Designed for: EVM	Mod. Date: 10/8/2014
		Project Title: UCC28950EVM-471	
		Sheet Title:	
SVN Rev: 1092		Assembly Variant: 001	Sheet: 2 of 2
Drawn By:		File: HPA471B_Hardware.SchDoc	Size: B
Engineer: Michael O'Loughlin		Contact:	

Texas Instruments
http://www.ti.com

© Texas Instruments 2014