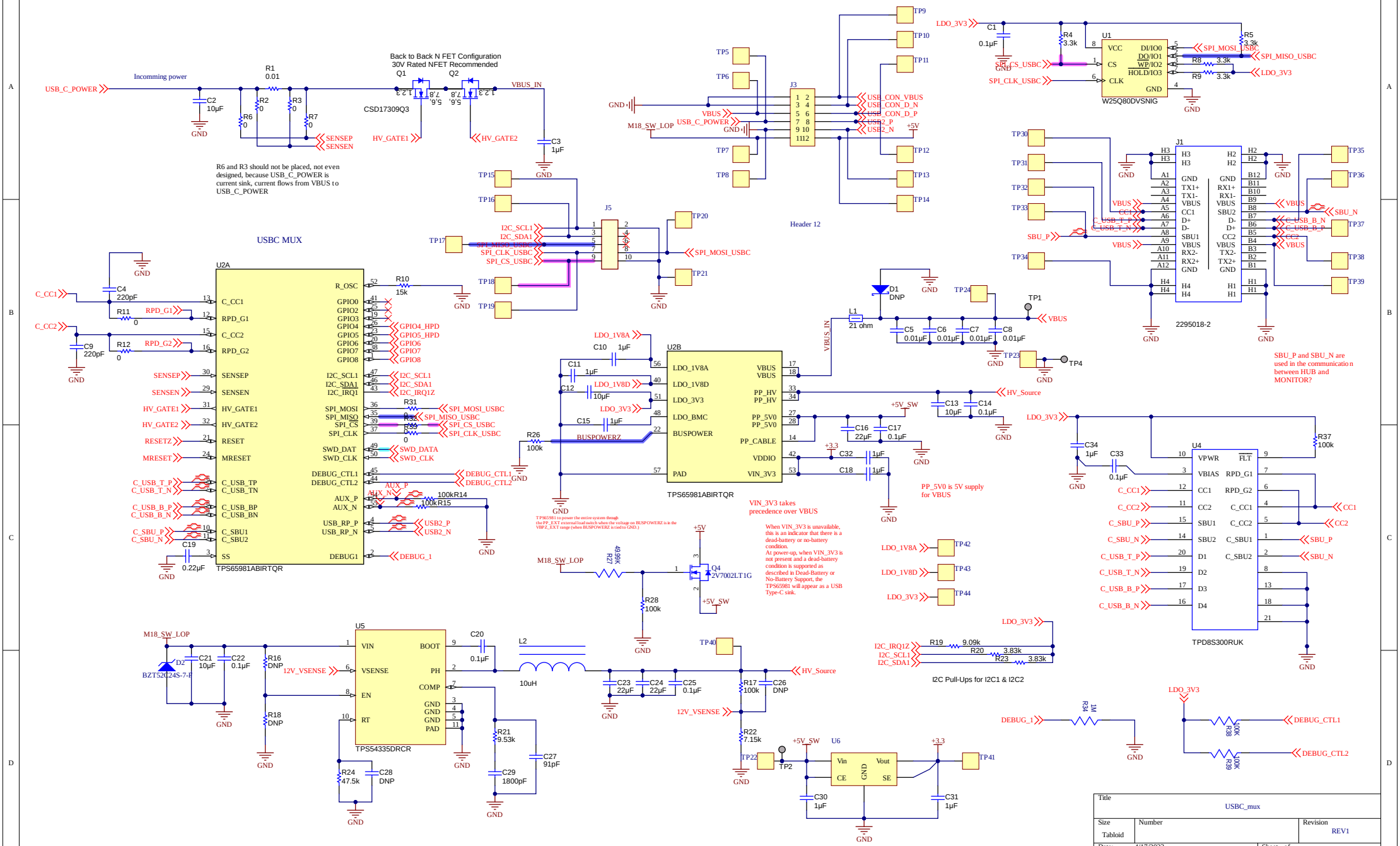
USBC MUX
Incomming power
Back to Back N FET Configuration
30V Rated NFET Recommended
CSD17309Q3
R6 and R3 should not be placed, not even designed, because USB_C_POWER is current sink, current flows from VBUS to USB_C_POWER
Header 12
W25Q80DVSNIG
2295018-2
SBU_P and SBU_N are used in the communication between HUB and MONITOR?
TPS65981ABIRTQR
PP_5V0 is 5V supply for VBUS
VIN_3V3 takes precedence over VBUS
When VIN_3V3 is unavailable, this is an indicator that there is a dead-battery or no-battery condition.
At power-up, when VIN_3V3 is not present and a dead-battery condition is supported as described in Dead-Battery or No-Battery Support, the TPS65981 will appear as a USB Type-C sink.
TPS65981 to power the entire system through the PP_EXT external load switch when the voltage on BUSPOWERZ is in the VBP2_EXT range (when BUSPOWERZ is tied to GND.)
TPD8S300RUK
I2C Pull-Ups for I2C1 & I2C2
TPS54335DRCR
Title
USBC_mux
Size
Tabloid
Number
Revision
REV1
Date: 4/17/2023
Sheet of
File: D:\Projects\..\USBC_mux.SchDoc
Drawn By: