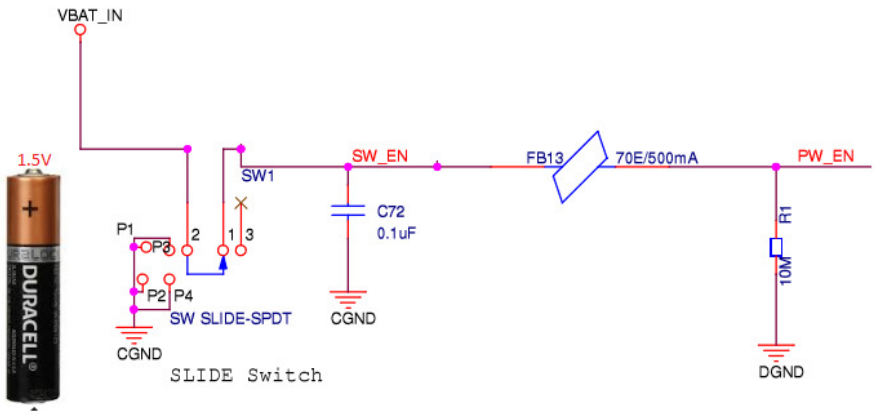
VBAT_IN
1.5V
DURACELL
P1
OP3
P2
P4
2
1
3
SW1
SW SLIDE-SPDT
CGND
CGND
SLIDE Switch
SW_EN
C72
0.1uF
FB13
70E/500mA
PW_EN
R1
10M
DGND

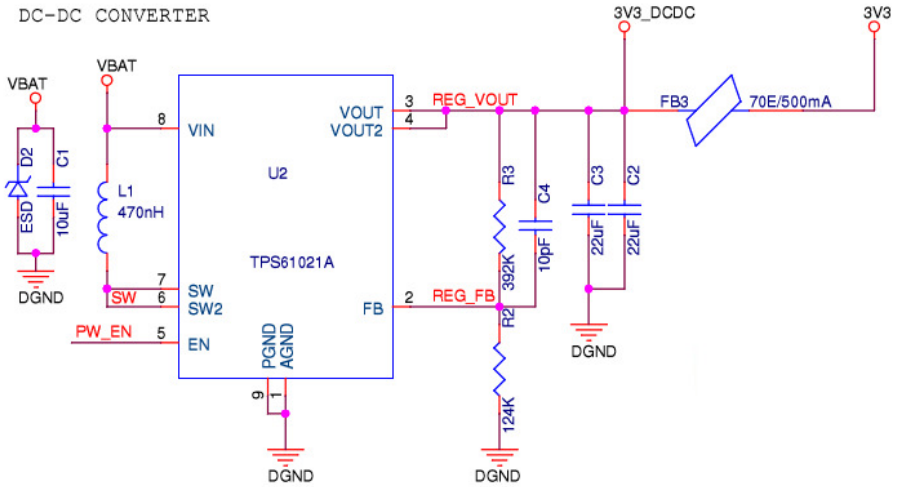
DC-DC CONVERTER
VBAT
VBAT
D2
ESD
C1
10uF
DGND
L1
470nH
8
VIN
7
SW
6
SW
SW2
PW_EN
5
EN
U2
TPS61021A
PGND
AGND
9
1
DGND
VOUT
VOUT2
3
4
REG_VOUT
2
REG_FB
FB
R3
392K
C4
10pF
R2
124K
DGND
3V3_DCDC
C3
22uF
C2
22uF
DGND
FB3
70E/500mA
3V3