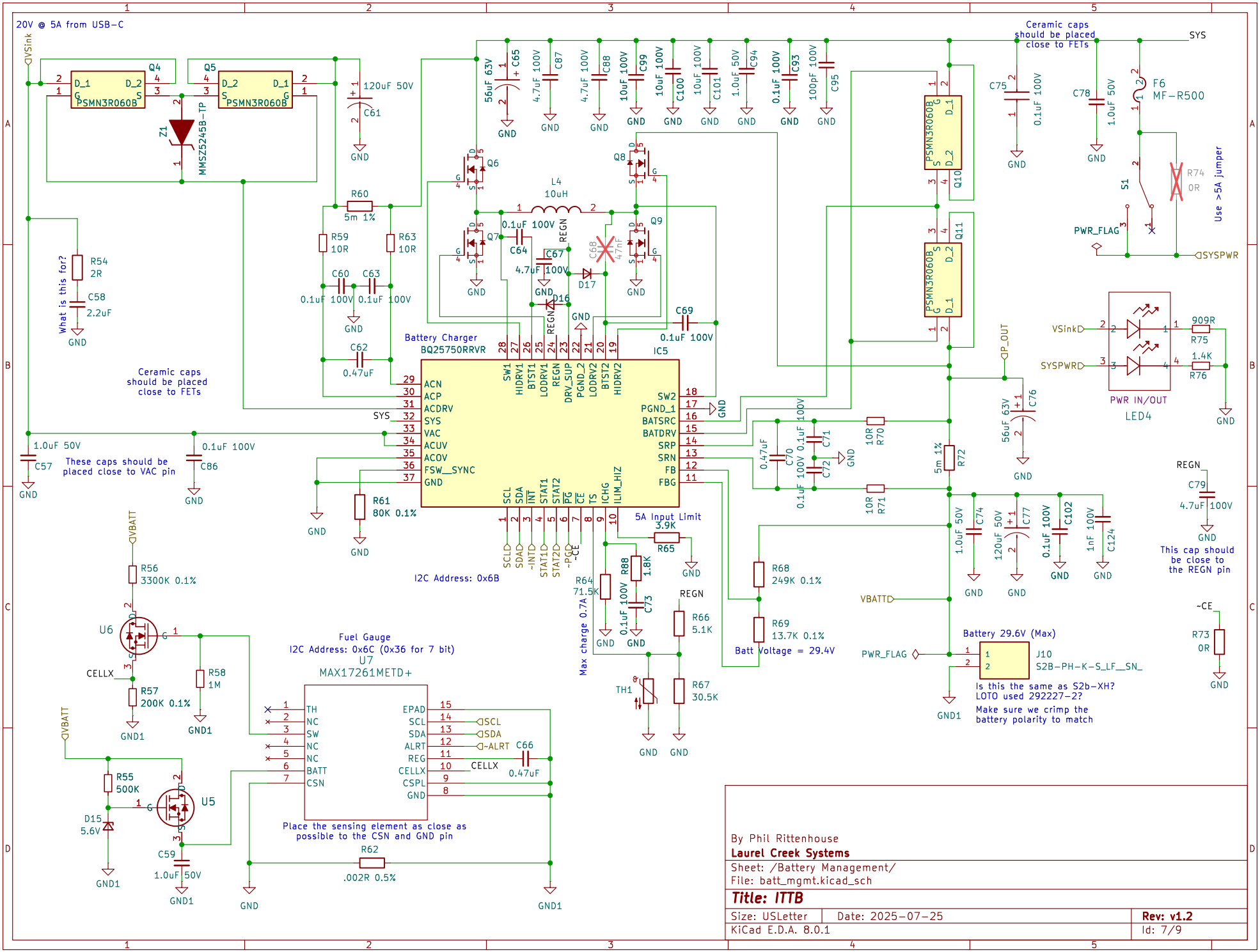
20V @ 5A from USB-C
VSink
Q4
PSMN3R060B
Q5
PSMN3R060B
Z1
MMSZ5245B-TP
120uF 50V
C61
GND
R60
5m 1%
R59
10R
R63
10R
C60
0.1uF 100V
C63
0.1uF 100V
C62
0.47uF
R54
2R
C58
2.2uF
What is this for?
Ceramic caps
should be placed
close to FETs
1.0uF 50V
C57
These caps should be
placed close to VAC pin
0.1uF 100V
C86
R61
80K 0.1%
Battery Charger
BQ25750RRVR
IC5
ACN
ACP
ACDRV
SYS
VAC
ACUV
ACOV
FSW_SYNC
GND
SW1
HIDRV1
BTST1
LODRV1
REGN
DRV_SUP
PGND_2
LODRV2
BTST2
HIDRV2
SW2
PGND_1
BATSRC
BATDRV
SRP
SRN
FB
FBG
SCL
SDA
INT
STAT1
STAT2
PG
CE
TS
ICHG
ILIM_HIZ
SCLD
SDAD
~INTD
STAT1D
STAT2D
~PGD
~CE
I2C Address: 0x6B
56uF 63V
C65
4.7uF 100V
C87
4.7uF 100V
C88
10uF 100V
C99
10uF 100V
C100
10uF 100V
C101
1.0uF 50V
C94
0.1uF 100V
C93
100pF 100V
C95
Q6
Q7
Q8
Q9
L4
10uH
0.1uF 100V
C64
REGN
C67
4.7uF 100V
C68
47nF
D17
D16
C69
0.1uF 100V
5A Input Limit
3.9K
R65
R64
71.5K
R88
1.8K
0.1uF 100V
C73
Max charge 0.7A
REGN
R66
5.1K
TH1
R67
30.5K
R68
249K 0.1%
R69
13.7K 0.1%
Batt Voltage = 29.4V
0.47uF
C70
0.1uF 100V
C71
0.1uF 100V
C72
10R
R70
10R
R71
5m 1%
R72
Q10
PSMN3R060B
Q11
PSMN3R060B
P_OUT
56uF 63V
C76
C75
0.1uF 100V
C78
1.0uF 50V
Ceramic caps
should be placed
close to FETs
SYS
F6
MF-R500
S1
R74
0R
Use >5A jumper
PWR_FLAG
SYSPWR
VSink
SYSPWR
909R
R75
1.4K
R76
PWR IN/OUT
LED4
1.0uF 50V
C74
120uF 50V
C77
0.1uF 100V
C102
1nF 100V
C124
VBATT
REGN
C79
4.7uF 100V
This cap should
be close to
the REGN pin
~CE
R73
0R
Battery 29.6V (Max)
J10
S2B-PH-K-S_LF__SN_
Is this the same as S2b-XH?
LOTO used 292227-2?
Make sure we crimp the
battery polarity to match
GND1
VBATT
R56
3300K 0.1%
U6
CELLX
R57
200K 0.1%
R58
1M
GND1
Fuel Gauge
I2C Address: 0x6C (0x36 for 7 bit)
U7
MAX17261METD+
TH
NC
SW
NC
NC
BATT
CSN
EPAD
SCL
SDA
ALRT
REG
CELLX
CSPL
GND
SCL
SDA
~ALRT
C66
0.47uF
Place the sensing element as close as
possible to the CSN and GND pin
R62
.002R 0.5%
VBATT
R55
500K
D15
5.6V
U5
C59
1.0uF 50V
GND1
By Phil Rittenhouse
Laurel Creek Systems
Sheet: /Battery Management/
File: batt_mgmt.kicad_sch
Title: ITTB
Size: USLetter
Date: 2025-07-25
Rev: v1.2
KiCad E.D.A. 8.0.1
Id: 7/9