5V

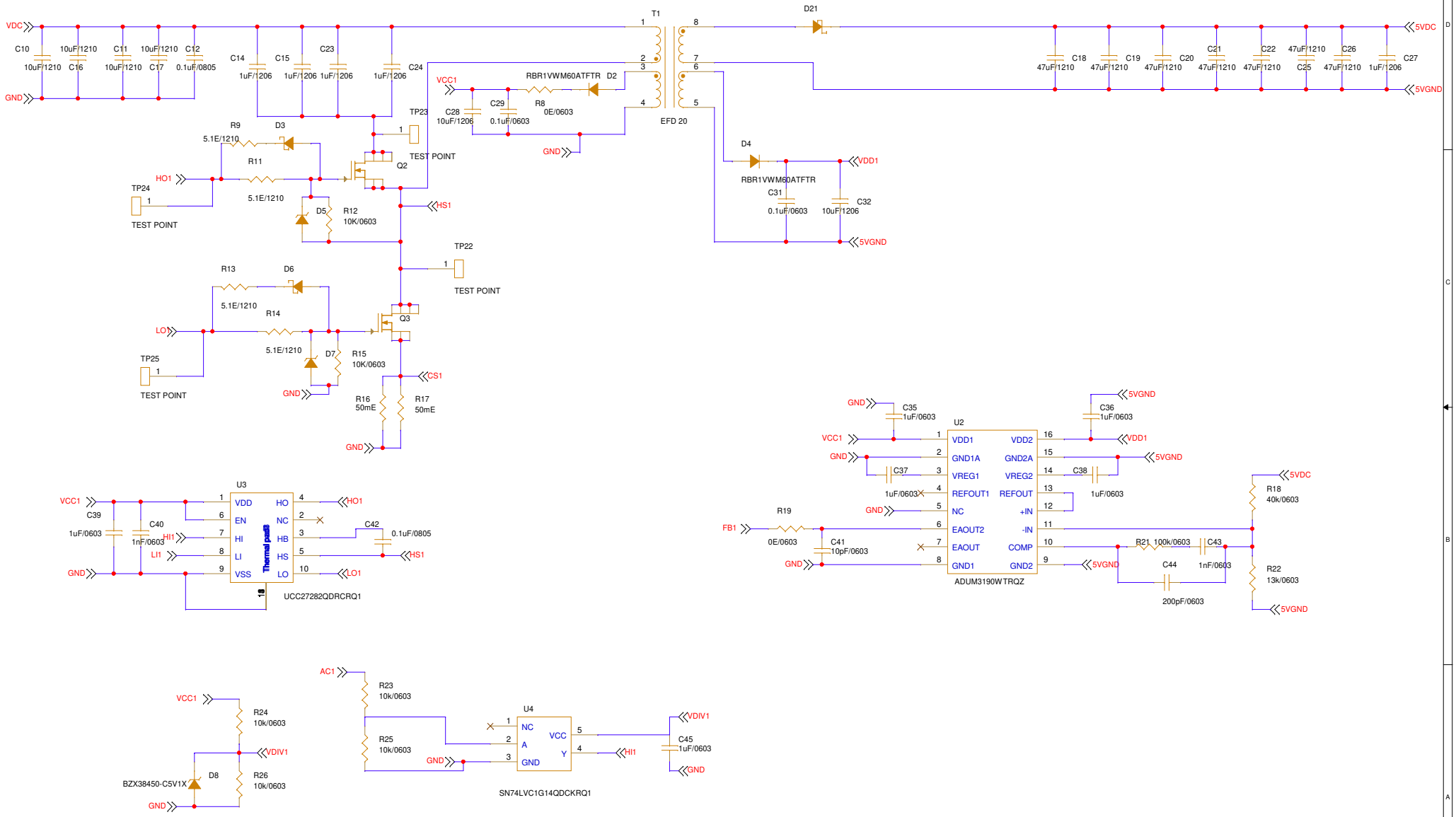
VDC
GND
C10 10uF/1210
C16 10uF/1210
C11 10uF/1210
C17 10uF/1210
C12 0.1uF/0805
C14 1uF/1206
C15 1uF/1206
C23 1uF/1206
C24 1uF/1206
T1
EFD 20
D21
5VDC
5VGND
C18 47uF/1210
C19 47uF/1210
C20 47uF/1210
C21 47uF/1210
C22 47uF/1210
C25 47uF/1210
C26 47uF/1210
C27 1uF/1206
VCC1
C28 10uF/1206
C29 0.1uF/0603
R8 0E/0603
RBR1VWM60ATFTR D2
TP23
TEST POINT
R9 5.1E/1210
D3
R11 5.1E/1210
HO1
TP24
TEST POINT
Q2
D5
R12 10K/0603
HS1
D4
RBR1VWM60ATFTR
VDD1
C31 0.1uF/0603
C32 10uF/1206
TP22
TEST POINT
R13 5.1E/1210
D6
R14 5.1E/1210
LO
TP25
TEST POINT
Q3
D7
R15 10K/0603
CS1
R16 50mE
R17 50mE
U3
VDD
EN
HI
LI
VSS
HO
NC
HB
HS
LO
Thermal pad
UCC27282QDRCRQ1
C39 1uF/0603
C40 1nF/0603
HI1
LI1
C42 0.1uF/0805
LO1
U2
ADUM3190WTRQZ
VDD1
GND1A
VREG1
REFOUT1
NC
EAOUT2
EAOUT
GND1
VDD2
GND2A
VREG2
REFOUT
+IN
-IN
COMP
GND2
C35 1uF/0603
C36 1uF/0603
C37 1uF/0603
C38 1uF/0603
R19 0E/0603
FB1
C41 10pF/0603
R21 100k/0603
C43 1nF/0603
C44 200pF/0603
R18 40k/0603
R22 13k/0603
R24 10k/0603
R26 10k/0603
D8 BZX38450-C5V1X
AC1
R23 10k/0603
R25 10k/0603
U4
NC
A
GND
VCC
Y
SN74LVC1G14QDCKRQ1
VDIV1
C45 1uF/0603