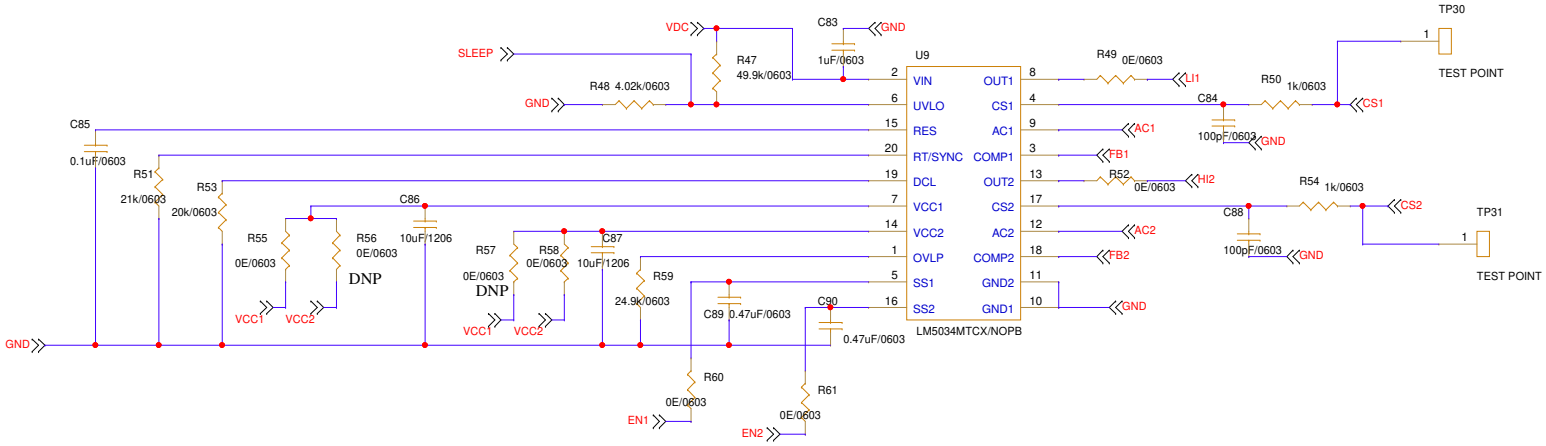PWM CONTROLLER