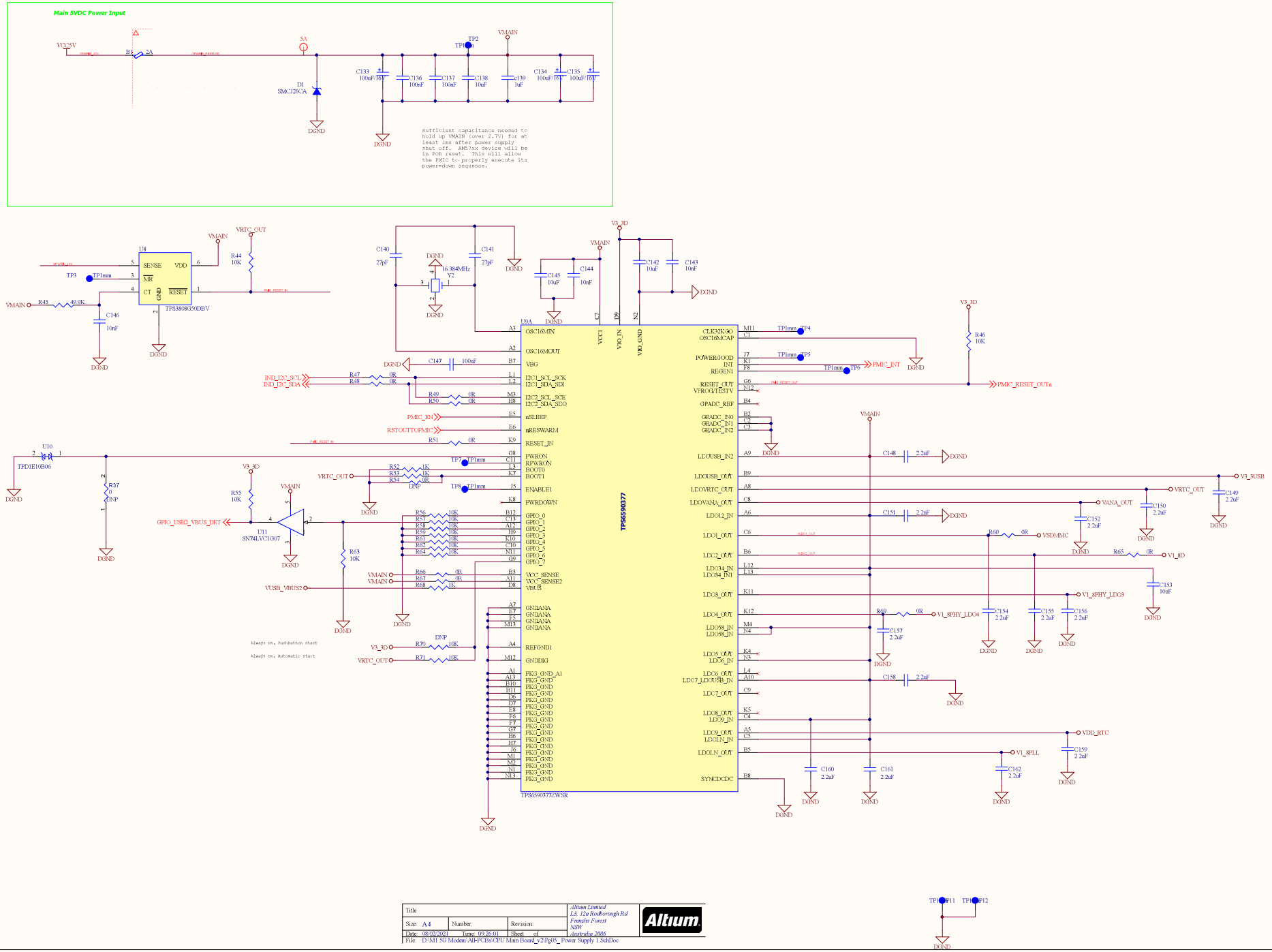
Main 5VDC Power Input
VCC5V
B5
2A
5A
D1
SMCJ26CA
DGND
C133 100uF/16V
C136 100nF
C137 100nF
C138 10uF
C139 1uF
C134 100uF/16V
C135 100uF/16V
TP2
VMAIN
Sufficient capacitance needed to hold up VMAIN (over 2.7V) for at least 1ms after power supply shut off. AM57xx device will be in POR reset. This will allow the PMIC to properly execute its power-down sequence.
U8
SENSE
VDD
MR
CT
GND
RESET
TPS3808G50DBV
VRTC_OUT
R44 10K
TP3
TP1mm
R45 49.9K
C146 10nF
C140 27pF
C141 27pF
16.384MHz
Y2
C145 10uF
C144 10nF
V3_3D
C142 10uF
C143 10nF
U9A
TPS659037ZWSR
OSC16MIN
OSC16MOUT
VBG
I2C1_SCL_SCK
I2C1_SDA_SDI
I2C2_SCL_SCK
I2C2_SDA_SDO
nSLEEP
nRESWARM
RESET_IN
PWRON
RPWRON
BOOT0
BOOT1
ENABLE1
PWRDOWN
GPIO_0
GPIO_1
GPIO_2
GPIO_3
GPIO_4
GPIO_5
GPIO_6
GPIO_7
VCC_SENSE
VCC_SENSE2
VBUS
GNDANA
REFGND1
GNDDIG
PKG_GND_A1
PKG_GND
VCC1
VIO_IN
VIO_GND
CLK32KGO
OSC16MCAP
POWERGOOD
INT
REGEN1
RESET_OUT
VPROG/TEST V
GPADC_REF
GPADC_IN0
GPADC_IN1
GPADC_IN2
LDOUSB_IN2
LDOUSB_OUT
LDOVRTC_OUT
LDOVANA_OUT
LDO12_IN
LDO1_OUT
LDO2_OUT
LDO34_IN
LDO34_IN1
LDO3_OUT
LDO4_OUT
LDO58_IN
LDO58_IN
LDO5_OUT
LDO6_IN
LDO6_OUT
LDO7_LDOUSB_IN
LDO7_OUT
LDO8_OUT
LDO9_IN
LDO9_OUT
LDOLN_IN
LDOLN_OUT
SYNCDCDC
PMIC_INT
PMIC_RESET_OUTn
IND_I2C_SCL
IND_I2C_SDA
PMIC_EN
RSTOUTTOPMIC
PMIC_RESET_IN
U10
TPD1E10B06
R37 0 DNP
R55 10K
U11
SN74LVC1G07
GPIO_USB2_VBUS_DET
VUSB_VBUS2
R63 10K
Always on, Pushbutton Start
Always on, Automatic start
R70 DNP 10K
R71 10K
VANA_OUT
VSDMMC
V1_8D
V1_8PHY_LDO3
V1_8PHY_LDO4
V3_3USB
VDD_RTC
V1_8PLL
C148 2.2uF
C151 2.2uF
C158 2.2uF
C149 2.2uF
C150 2.2uF
C152 2.2uF
C153 10uF
C154 2.2uF
C155 2.2uF
C156 2.2uF
C157 2.2uF
C159 2.2uF
C160 2.2uF
C161 2.2uF
C162 2.2uF
TP11
TP12
Title
Size: A4
Number:
Revision:
Date: 08/02/2021
Time: 09:26:01
Sheet of
File: D:\M1 5G Modem\All-PCBs\CPU Main Board_v2\Pg05_Power Supply 1.SchDoc
Altium Limited
L3, 12a Rodborough Rd
Frenchs Forest
NSW
Australia 2086
Altium

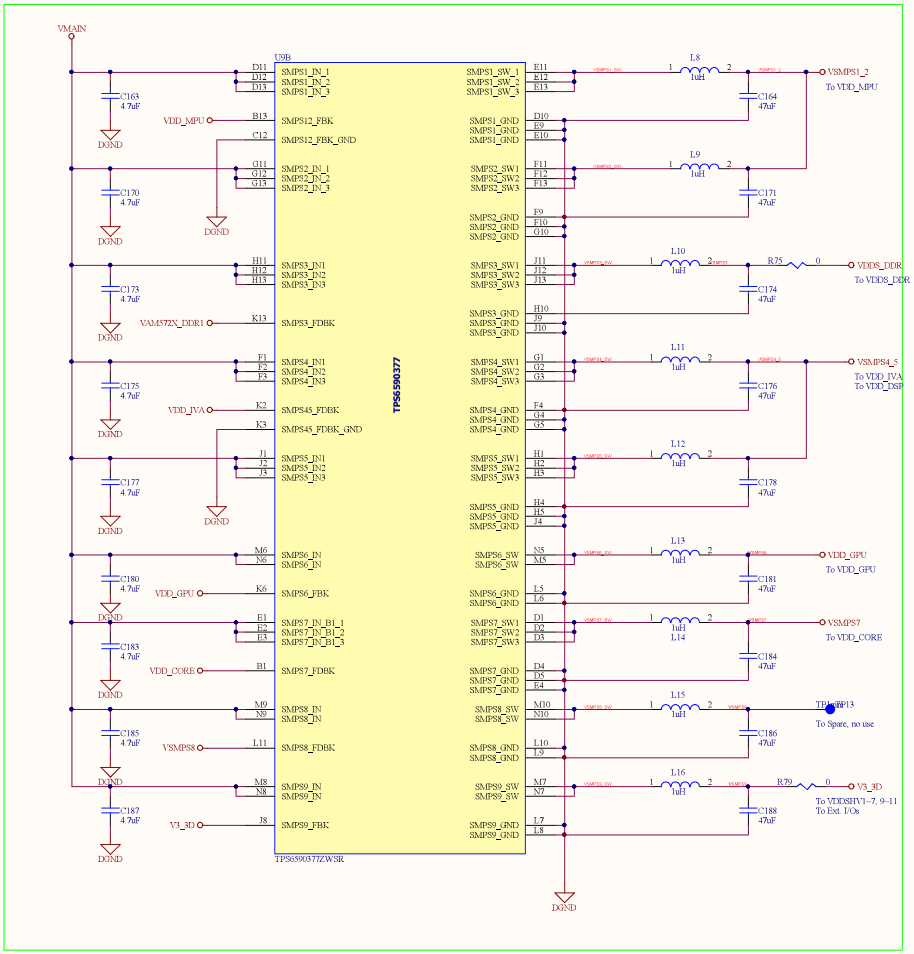

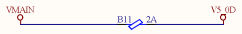

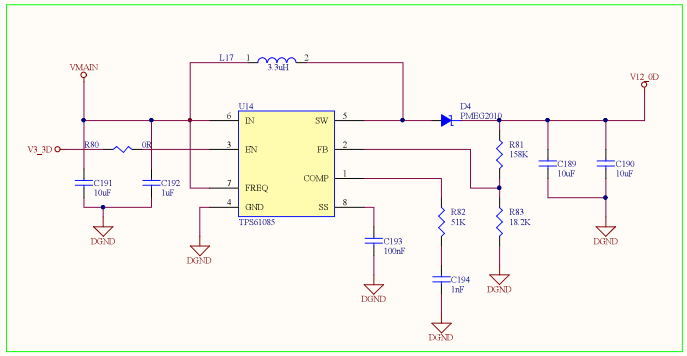

Title			
Size: A4	Number:	Revision:	
Date: 08/02/2021	Time: 09:26:01	Sheet of	
File: D:\M1 5G Modem\All-PCBs\CPU Main Board_v2\Pg06_Power Supply 2.SchDoc			

Altium Limited
L3, 12a Rodborough Rd
Frenchs Forest
NSW
Australia 2086

Altium