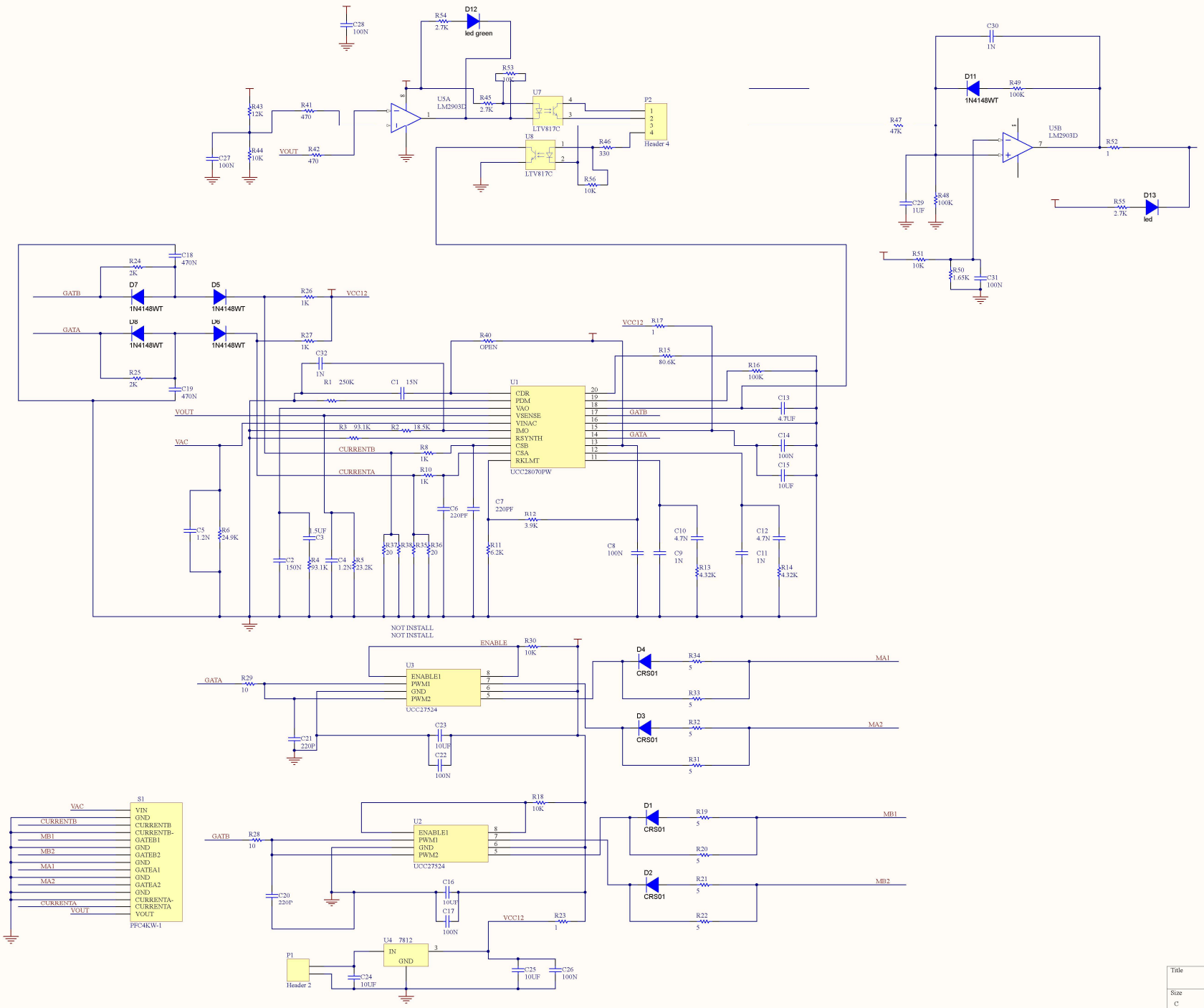

Title		
Size C	Number	Revision
Date: 9/7/2018		Sheet of
File: C:\Users\..\slot1pcb.SchDoc		Drawn By: