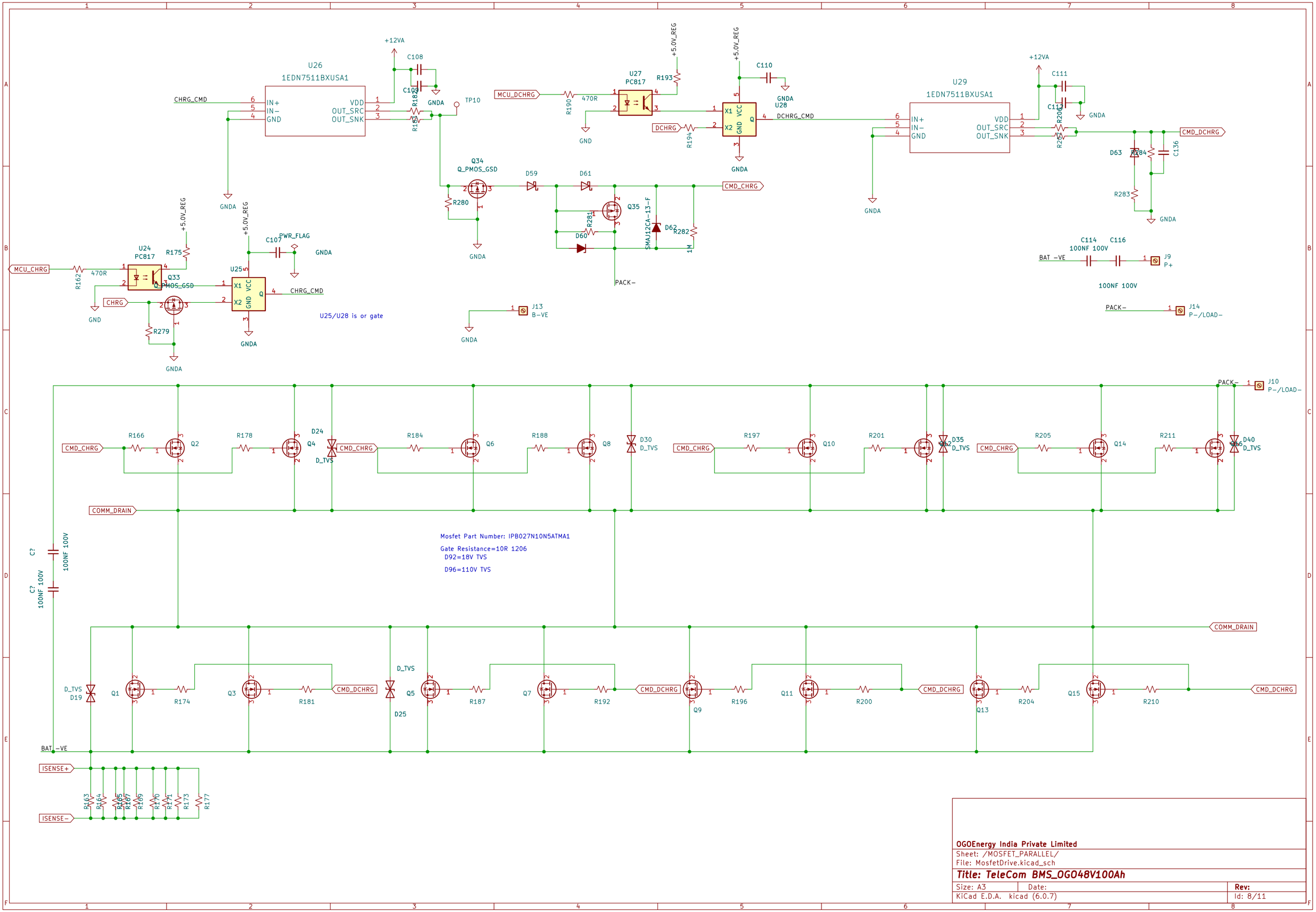

OGOEnergy India Private Limited

Sheet: /MOSFET_PARALLEL/

File: MosfetDrive.kicad_sch

Title: TeleCom BMS_OGO48V100Ah

Size: A3	Date:	Rev:
KiCad E.D.A. kicad (6.0.7)		Id: 8/11