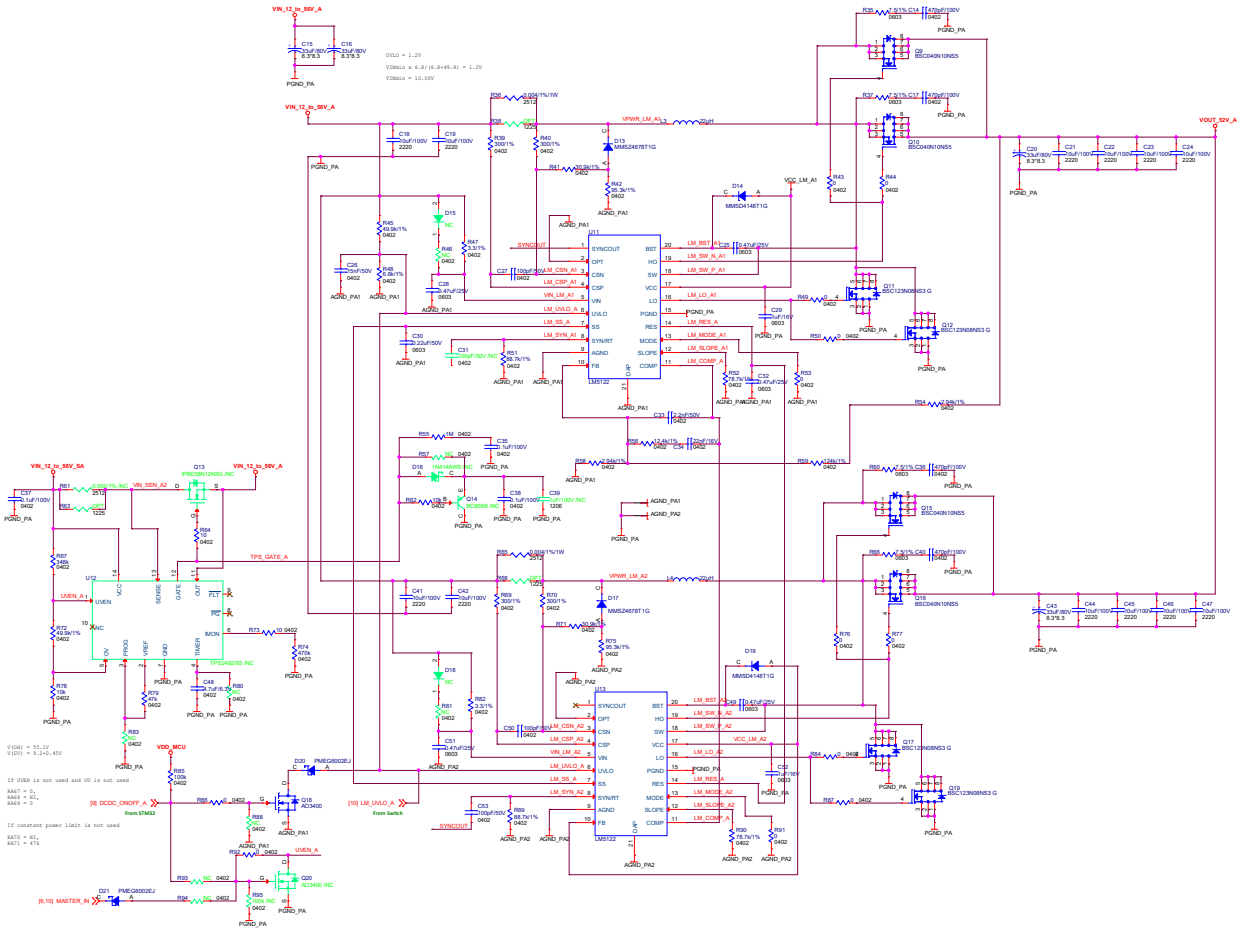
VIN_12_to_56V_A
VIN_12_to_56V_SA
VOUT_52V_A
UVLO = 1.2V
VIDmin = 6.8/(6.8+49.9) = 1.2V
VIDmin = 10.00V
U11
LM5122
U12
TPS2492/93 INC
U13
LM5122
VPWR_LM_A1
VPWR_LM_A2
VCC_LM_A1
VCC_LM_A2
TPS_GATE_A
UVEN_A
VDD_MCU
[9] DCDC_ONOFF_A
From STM32
[10] LM_UVLO_A
From Switch
[6,10] MASTER_IN
V(UV) = 55.1V
V(OV) = 9.2+2.45V
If UVEN is not used and OV is not used
RA47 = 0,
RA48 = NI,
RA49 = 0
If constant power limit is not used
RA70 = NI,
RA71 = 47k